caple

Downdraft Induction Hob
Instruction Manual

DD780BK

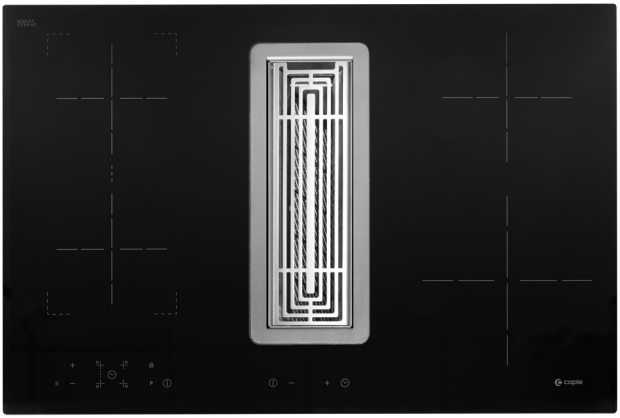

Contact Caple on 0117 938 7420 for spare parts or www.caple.co.uk

CONTENTS

Safety Instructions	3
Environmental Protection	10
Warranty	10
Installation	11
Electrical Connection	15
Installation Dimensions	17
Product Overview	27
Cookware	28
Hob Controls	31
Extractor Controls	36
Cleaning and Maintenance	38
Troubleshooting	44
After Sales	46
Caple Contact Details	48

SAFETY INSTRUCTIONS

Carefully read all instructions before using your appliance and keep them in a convenient place for reference when necessary.

GENERAL SAFETY WARNINGS

This appliance can be used by children aged from 8 years and above and by persons with reduced physical, sensory or mental capabilities or lack of experience and knowledge if they have been given supervision or instruction concerning use of the appliance in a safe way and understand the hazards involved. Children should not play with the appliance. Cleaning and user maintenance should not be made by children without supervision

WARNING:

The appliance and its accessible parts become hot during use. Care should be taken to avoid touching heating elements. Keep children less than 8 years of age away unless they are continually supervised.

Unattended cooking on a hob with fat or oil can be dangerous and may result in fire. NEVER try to extinguish such a fire with water, but switch off the appliance and cover the flame with a lid or a fire blanket.

The cooking process has to be supervised. A short-term cooking process has to be supervised continuously.

Danger of fire: Do not store items on the cooking surfaces.

If the surface is cracked, switch off the appliance to avoid the possibility of electric shock.

- For induction hobs, metallic objects such as knives, forks, spoons and lids should not be placed on the hob surface because they can get hot.
- For induction hobs, after use switch off the hob element using the touch controls. Do not rely on the pan detector.
- Do not operate the appliance with an external timer or separate remote-control system.
- Do not use harsh abrasive cleaners or scourers to clean the hob surface.
- Do not use steam cleaners for cleaning the appliance.

- Your appliance is produced in accordance with all applicable local and international standards and regulations.
- Maintenance and repair work should only be carried out by authorised service technicians.
- Installation and repair work that is carried out by unauthorised technicians may be dangerous. Do not alter or modify the specifications of the appliance in any way. Inappropriate hob guards can cause accidents.
- Before connecting your appliance, make sure that the local distribution conditions (nature of the gas and gas pressure or electricity voltage and frequency) and the specifications of the appliance are compatible.
  The specifications for this appliance are stated on the rating label.

CAUTION:

This appliance is designed for cooking food and extracting unpleasant odours from the kitchen. It is intended for indoor domestic household use only.
It should not be used for any other purpose or in any other application, such as for non-domestic use, in a commercial environment or for heating a room.

- All possible measures have been taken to ensure your safety. Since the glass may break, care should be taken while cleaning to avoid scratching. Avoid hitting or knocking the glass with accessories.
- Make sure that the supply cord is not trapped or damaged during installation. If the supply cord is damaged, it must be replaced by the manufacturer, its service agent or similarly qualified persons in order to prevent a hazard.
- Please keep children and animals away from this appliance.
- When the induction hob is in use, keep the objects that are sensitive to magnetic fields (such as credit cards, bank cards, watches, and similar items) away from the hob. It is strongly suggested that anyone with a pacemaker should consult their cardiologist before using the induction hob.
- The performance of your extractor will vary depending on a number of factors. These include type of extraction, room volume, length of ducting, ventilation available and the cleanliness of the filters.

INSTALLATION WARNINGS

- Do not operate the appliance before it is fully installed.
- The appliance must be installed by an authorised technician. The manufacturer is not responsible for any damage that might be caused by defective placement and installation by unauthorised people.
- When the appliance is unpacked, make sure that it is has not been damaged during transportation.
- In the case of a defect do not use the appliance and contact a qualified service agent immediately. The materials used for packaging (nylon, staplers, Styrofoam, etc.) may be harmful to children and they should be collected and removed immediately.
- Protect your appliance against atmospheric effects.
- Do not expose it to effects such as sun, rain, snow, dust or excessive humidity.
- Materials around the appliance (i.e. cabinets) must be able to withstand a minimum temperature of 100°C.
- The temperature of the bottom surface of the hob may rise during operation, therefore it is recommended a board is installed underneath the product.
- The extracted air must not be discharged into a flue that is used for exhausting fumes from appliances burning gas or other fuels.
- Regulations concerning the discharge of air have to be conformed to.

DURING USE:

- To ensure the best performance, we recommend switching on the extractor 15 minutes before cooking and leave it running 15 minutes after. This will ensure that the air in the kitchen is being circulated before cooking commences and the air is being cleaned after cooking has finished.
- Do not put flammable or combustible materials in or near the appliance when it is operating.
- Do not leave the hob unattended while cooking with solid or liquid oils. They may catch fire under extreme heating conditions. Never pour water on to flames that are caused by oil, instead switch the hob off and cover the pan with its lid or a fire blanket.
- If the product will not be used for a long period of time, turn the main control switch off.
- Always position pans over the centre of the cooking zone, and turn the handles to a safe position so they cannot be knocked or grabbed.

APPROPRIATE USE:

- This appliance is intended to be used in household and similar applications such as:
  - › Staff kitchen areas in shops, offices and other working environments.
  - › Farm Houses.
  - › By clients in hotels, motels and other residential type environments.
  - › Bed and breakfast type environments.

CLEANING AND MAINTENANCE WARNINGS

- Make sure that your appliance is turned off at the mains before carrying out any cleaning or maintenance operations.
- To maintain the efficiency and safety of your appliance, we recommend you always use original spare parts and to call our authorised service agents in case of need.
- The extractor and its filter should be cleaned regularly in order to keep in good working condition.
- Clean the extractor according to the instruction manual to reduce the risk of fire.

ENVIRONMENTAL PROTECTION

Waste electrical products should not be disposed of with household waste. Please recycle where facilities exist. Check with your Local Authority or retailer for recycling advice. This appliance is marked according to the European directive on Waste Electrical and Electronic Equipment (WEEE).

By ensuring this product is disposed of correctly, you will help prevent potential negative consequences for the environment and human health, which could otherwise be caused by inappropriate waste handling of this product. The symbol on the product indicates that this product may not be treated as household waste. Instead it shall be handed over to the applicable collection point for the recycling of electrical and electronic equipment. Disposal must be carried out in accordance with local environmental regulations for waste disposal.

For more detailed information about treatment, recovery and recycling of this product, please contact your local council, your household waste disposal service or the retailer where you purchased the product.

WARRANTY

Your new appliance is covered by warranty. The warranty card is enclosed - if it is missing, you must provide the following information to your retailer in order to receive a replacement: date of purchase, model and serial number. Registration can also be completed online by visiting www.caple.co.uk.

Ensure you keep your warranty card safe, you may need to show it to Caple Service together with proof of purchase. If you fail to show your warranty card you will incur all repair charges.

Spare parts are only available from Caple Service and spare parts authorised centres.

CE DECLARATIONS OF CONFORMITY

This appliance has been manufactured to the strictest standards and complies with all applicable legislation, Low Voltage Directive (LVD) and Electromagnetic Compatibility (EMC).

UKCA DECLARATIONS OF CONFORMITY

This appliance has been manufactured to the strictest standards and complies with all applicable legislation.

TECHNICAL FICHE

This appliance conforms to all current and applicable energy regulations. To view the Technical Fiche that supports the energy labelling data, please visit the product page on our website www.caple.co.uk.

INSTALLATION

WARNING:

This appliance must be installed by an authorised service person or qualified technician, according to the instructions in this guide and in compliance with the current local regulations.

Incorrect installation may cause harm and damage, for which the manufacturer accepts no responsibility and the warranty will not be valid.

Prior to installation, ensure that the local distribution conditions (electricity voltage and frequency) and the adjustments of the appliance are compatible. The adjustment conditions for this appliance are stated on the rating label.

The laws, ordinances, directives and standards in force in the country of use are to be followed (safety regulations, proper recycling in accordance with the regulations, etc.).

After removing the packaging material from the appliance and its accessories, ensure that the appliance is not damaged. If you suspect any damage, do not use it and contact an authorised service person or qualified technician immediately.

LOCATION

Make sure that there are no flammable or combustible materials in the close vicinity, such as curtains, oil, cloth etc. which may catch fire.

The worktop and furniture surrounding the appliance must be made of materials resistant to temperatures above 100°C.

If a cupboard is to be installed above the appliance, the safety distance between hob and any cupboard should be as shown below:

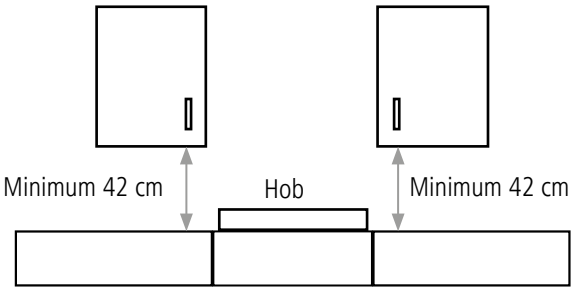

The appliance should not be installed directly above a dishwasher, fridge, freezer, washing machine or clothes dryer.

If the base of the appliance is accessible by hand, a barrier made from a suitable material must be fitted below the base of the appliance, ensuring that there is no access to the base of the appliance.

VENTILATION REQUIREMENTS

To ensure adequate ventilation of your induction hob, please ensure the air inlet and outlet are not blocked.

A 5mm gap must be left at the front of the unit to allow air to circulate.

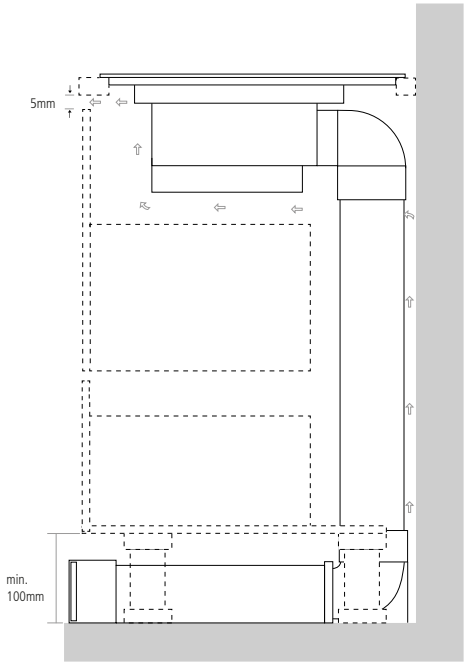

COMPONENTS

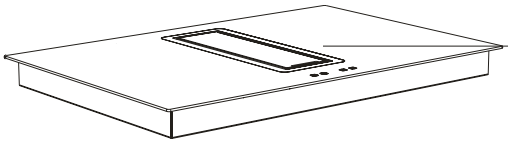
Induction Hob

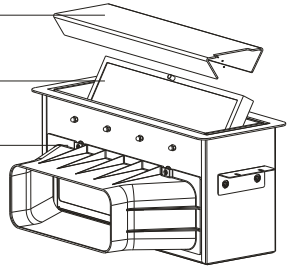
Filter Cover
Metal Grease Cover
Extractor Unit

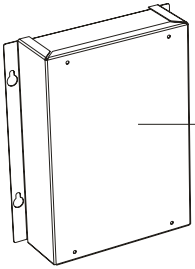
Control Box

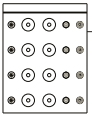
Assembling Kit

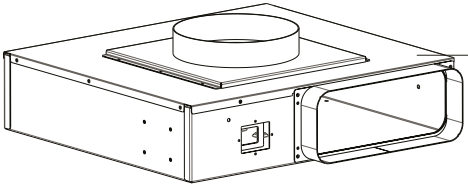
Motor Unit

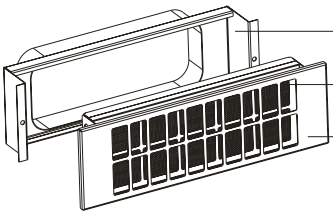
Activated Charcoal Filter Housing
Activated Charcoal Filter
Activated Charcoal Filter Cover

ASSEMBLING THE EXTRACTION UNIT

Assemble the extraction unit towards the induction hob bottom cover. Use firstly the screws (3) and washers (2), then the screws (1) and the washers (2) included in the assembling kit.

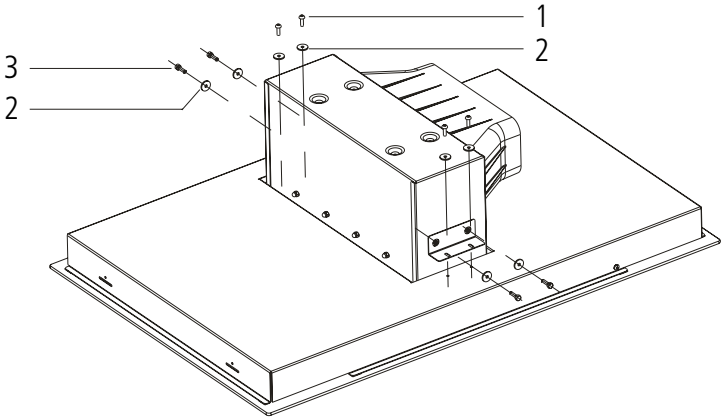

INSTALLING THE HOB

The appliance is supplied with an installation kit including adhesive sealing material, fixing brackets and screws.

Apply the supplied one-sided self-adhesive sealing tape (1) all the way around the lower edge of the hob. Do not stretch the tape.

Screw the 4 worktop mounting brackets (2) into the side walls of product.

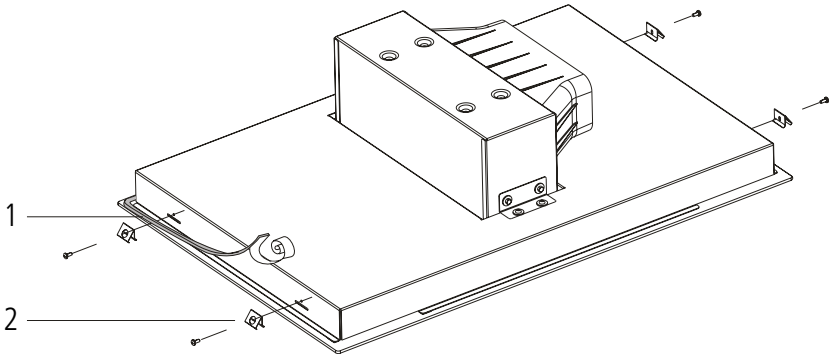

ELECTRICAL CONNECTION

WARNING:

The electrical connection of this appliance should be carried out by an authorised service person or qualified electrician, according to the instructions in this guide and in compliance with the current local regulations.

WARNING: THE APPLIANCE MUST BE EARTHED

- Before connecting the appliance to the power supply, the voltage rating of the appliance (stamped on the appliance identification plate) must be checked for correspondence to the available mains supply voltage, and the mains electric wiring should be capable of handling the appliance's power rating (also indicated on the identification plate).
- During installation, please ensure that isolated cables are used. An incorrect connection could damage your appliance. If the mains cable is damaged and needs to be replaced this should be done by a qualified person.
- Do not use adaptors, multiple sockets and/or extension leads.
- The supply cord should be kept away from hot parts of the appliance and must not be bent or compressed. Otherwise the cord may be damaged, causing a short circuit.
- If the appliance is not connected to the mains with a plug, an all-pole disconnector switch (with at least 3mm contact spacing) must be used in order to meet the safety regulations.
- The fused switch must be easily once the appliance has been installed.
- Ensure all connections are adequately tightened.
- Fix the supply cable in the cable clamp and then close the cover.
- The terminal box connection is placed on the terminal box.

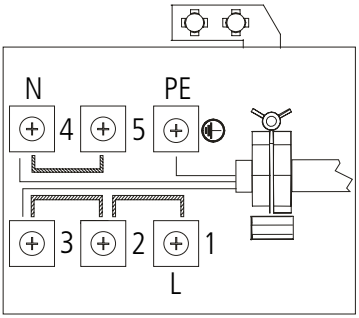

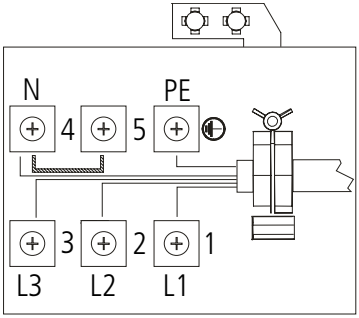

NOTE:

Left image is how the appliance is wired. Right image shows an alternative wiring method.

POWER SUPPLY CONNECTION

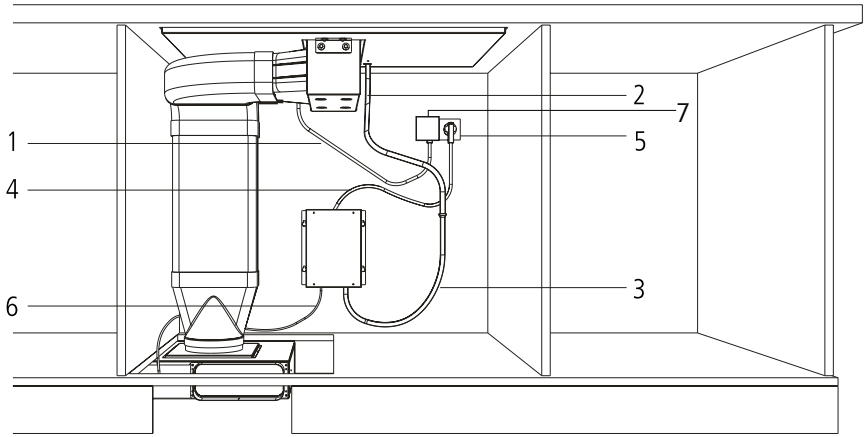

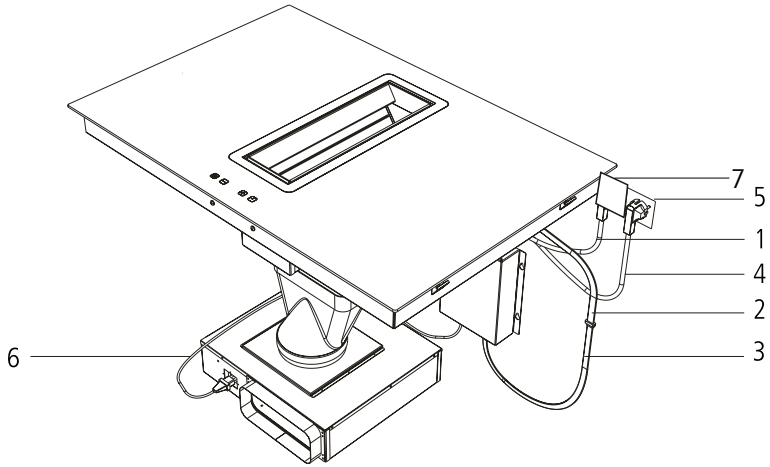

To establish the power supply connection for the appliance:

› Connect the air extraction control unit data cable (2) with the data cable from the control box (3).

› Hardwire the hob cable (1) into the mains supply (7).

› Plug the main cable of the control box (4) into the socket (5).

› Plug the motor connection cable (6) from the control box into the socket on the motor unit.

INSTALLATION DIMENSIONS

ISLAND WORKTOP INSTALLATION [SIDE OUTLET]

Cut the aperture dimensions as indicated in the figure. Locate the aperture on the worktop so that, after the hob is installed, the following requirements are followed.

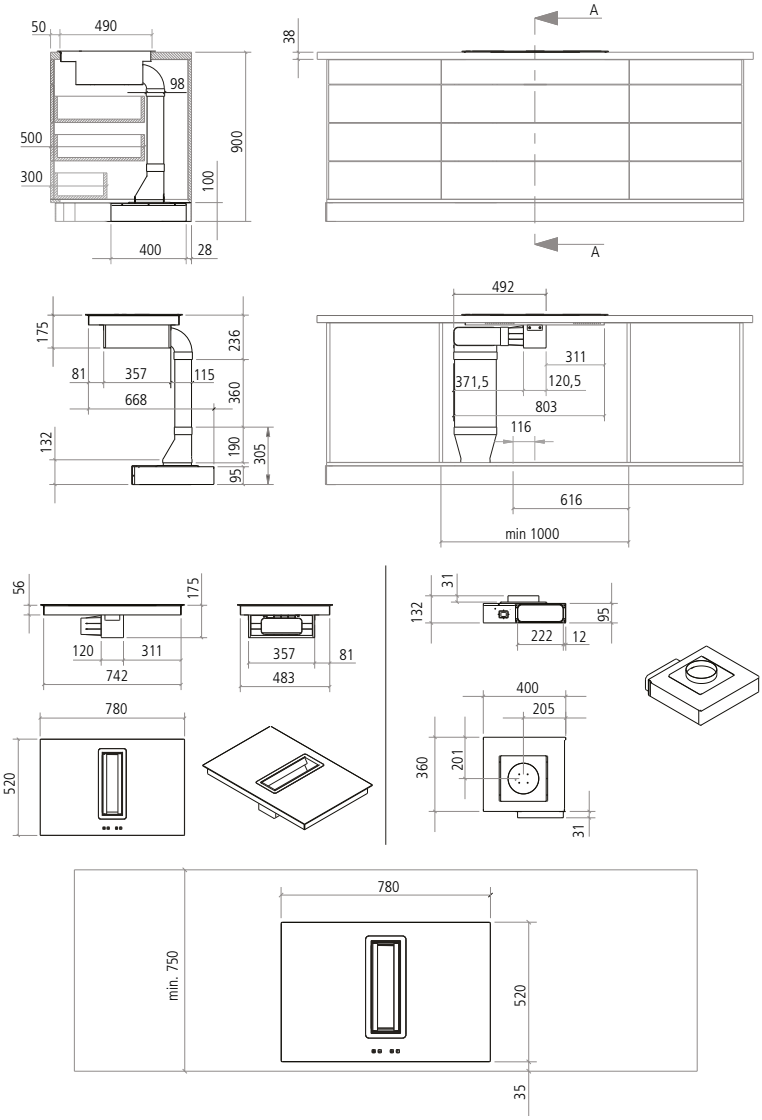

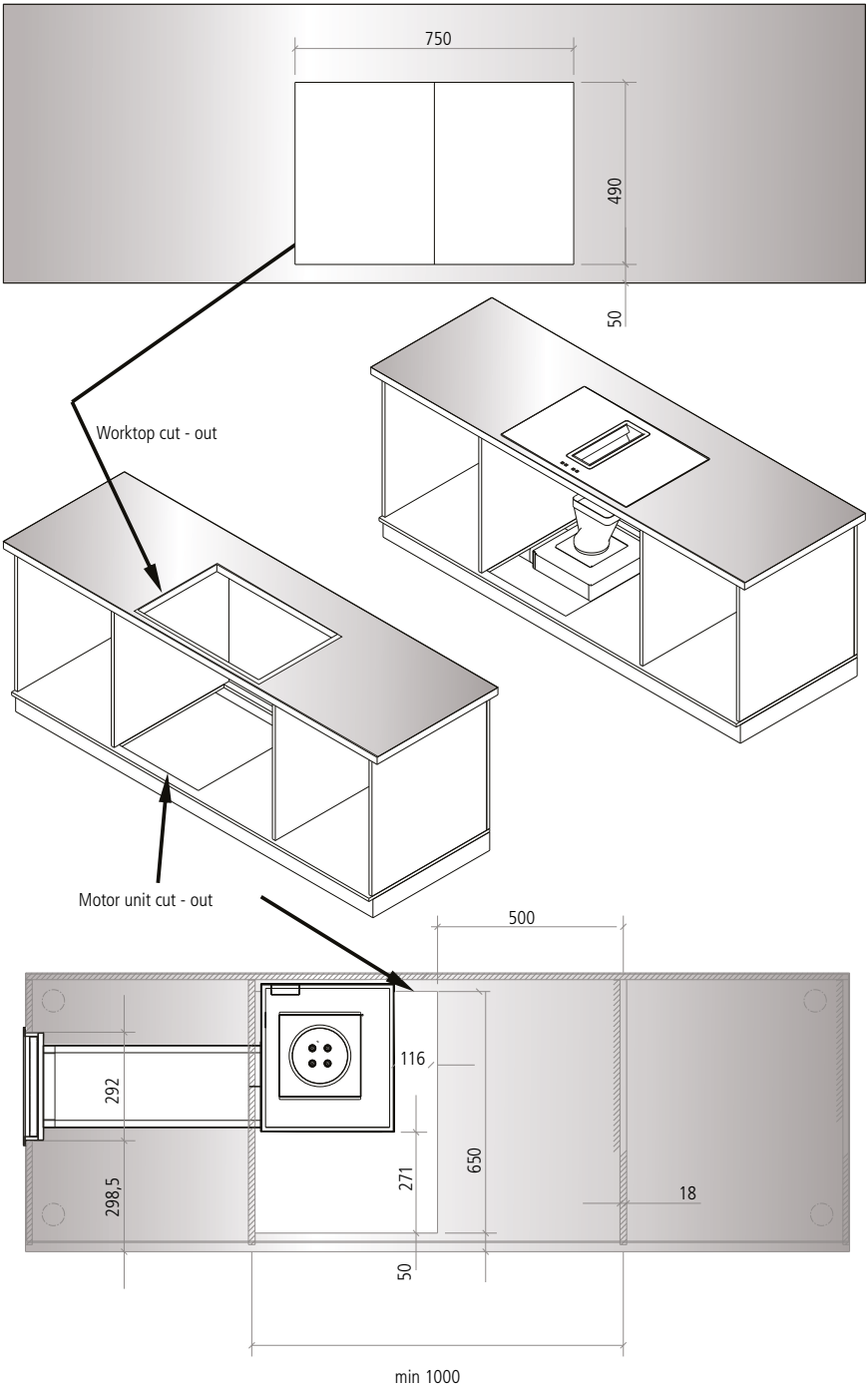
750
490
50
Worktop cut - out
Motor unit cut - out
500
116
292
298,5
271
650
18
50
min 1000

ISLAND WORKTOP INSTALLATION [FRONTAL OUTLET]

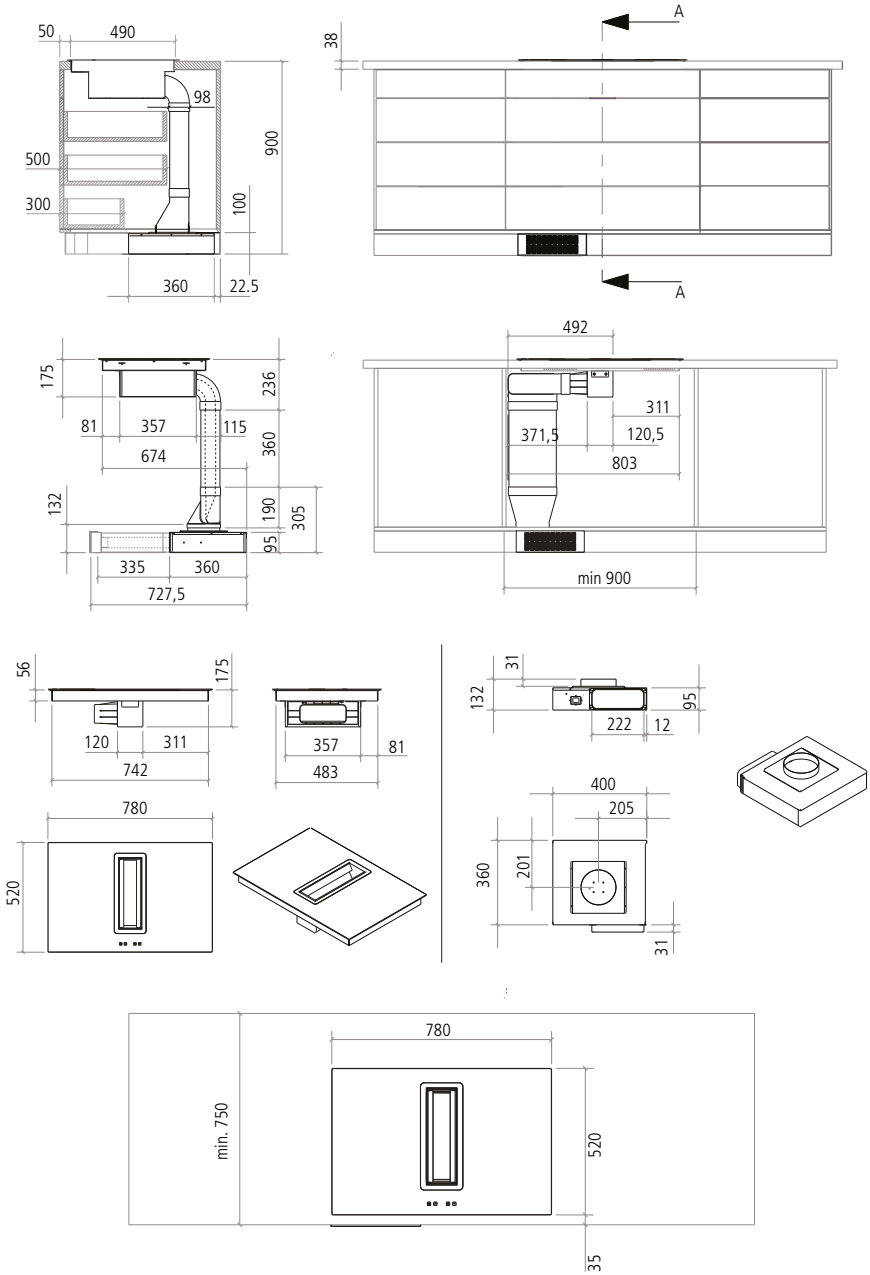

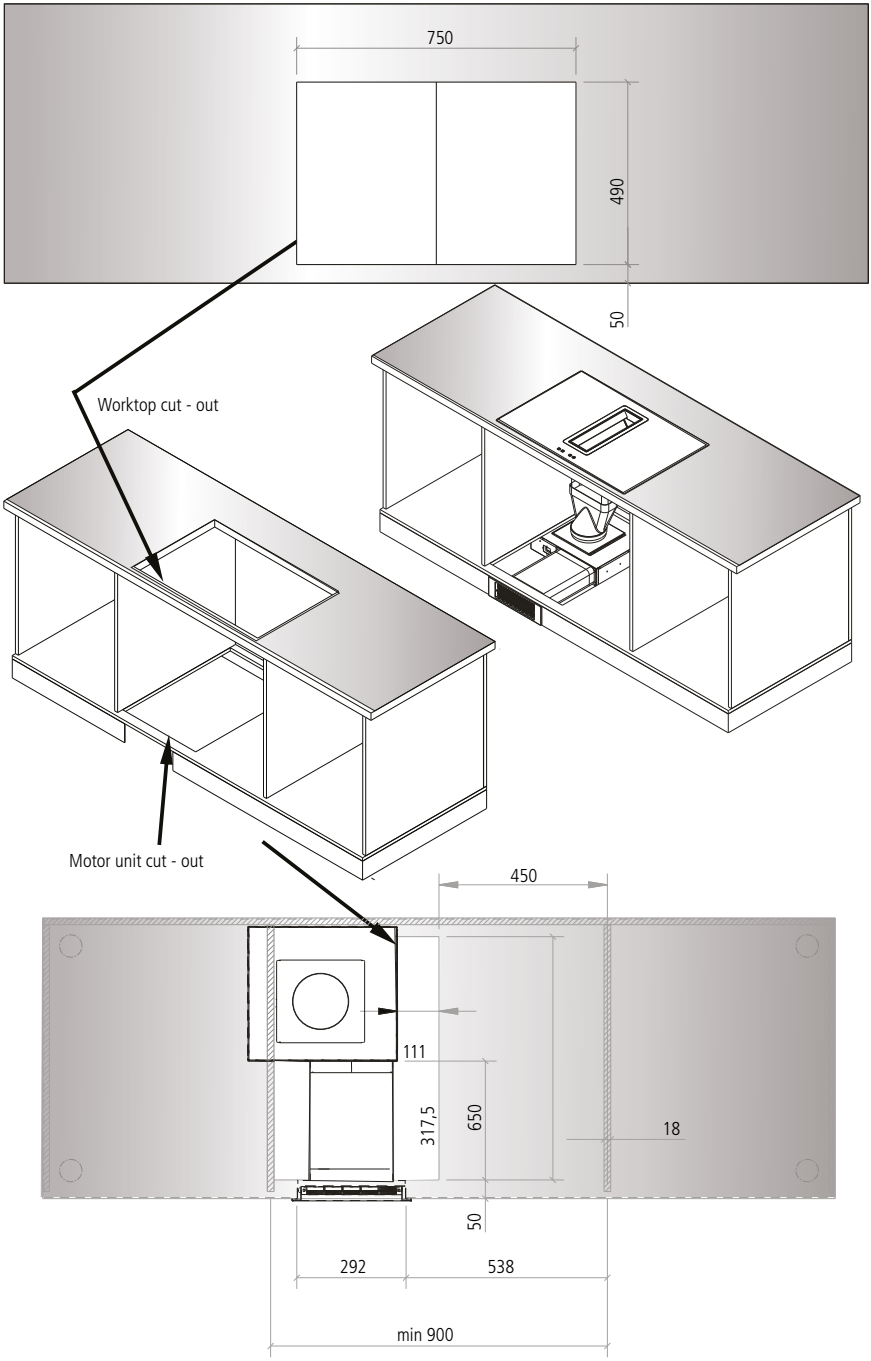
750
490
50
Worktop cut - out
Motor unit cut - out
450
111
317,5
650
18
50
292
538
min 900

STANDARD 60CM WORKTOP INSTALLATION [SIDE OUTLET]

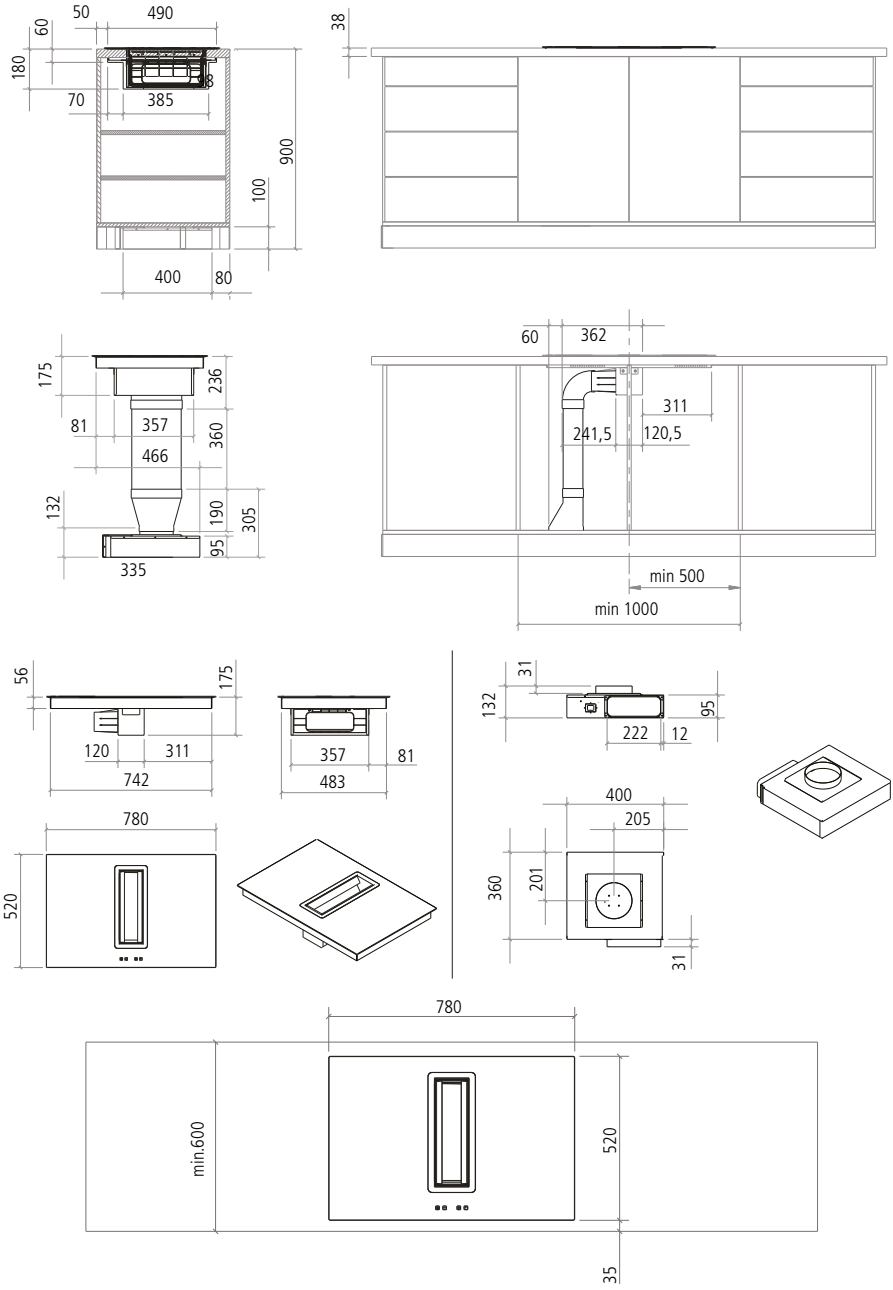

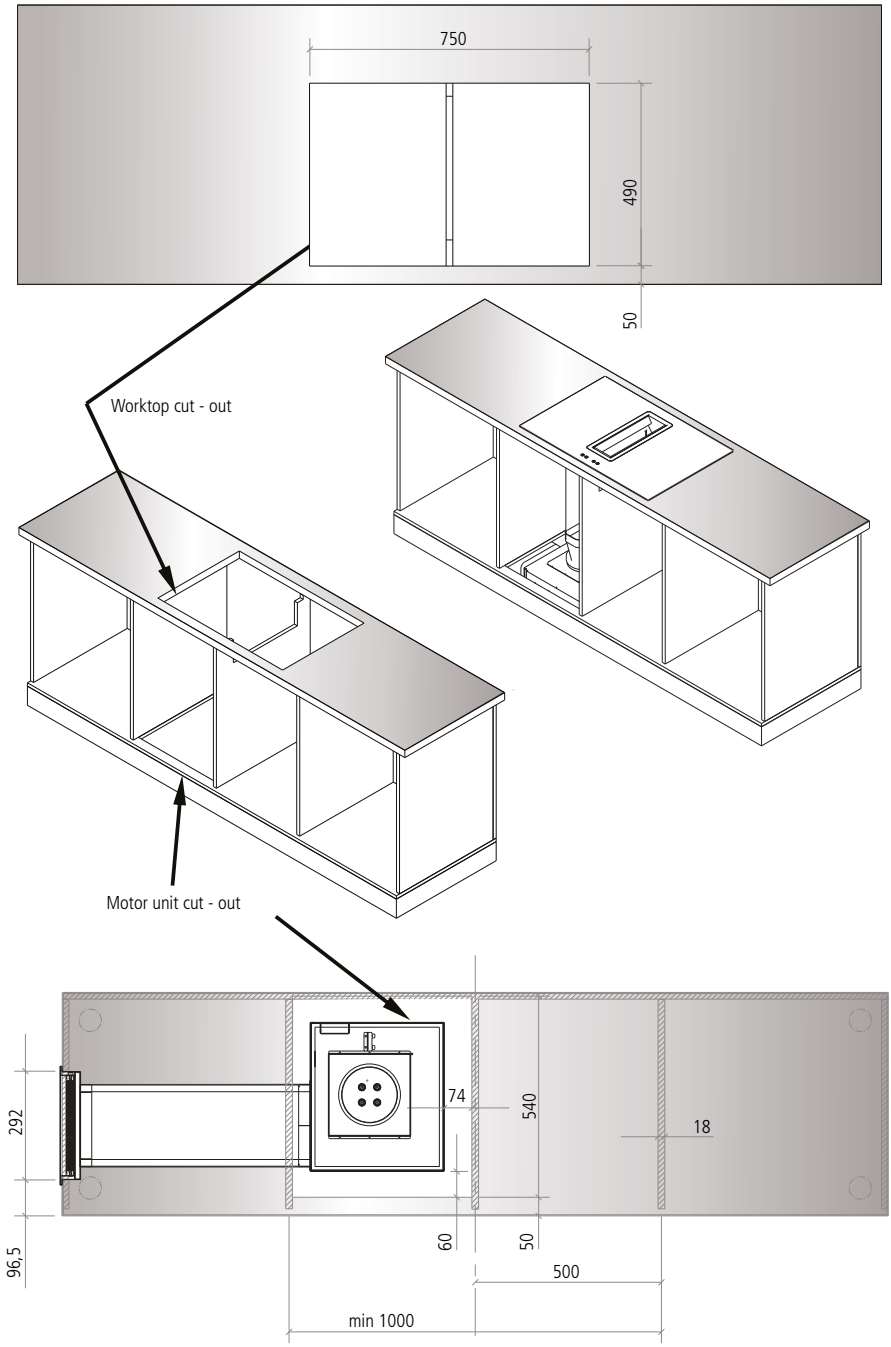
750
490
50
Worktop cut - out
Motor unit cut - out
292
96,5
74
540
18
60
50
500
min 1000

STANDARD 60CM WORKTOP INSTALLATION [FRONTAL OUTLET]

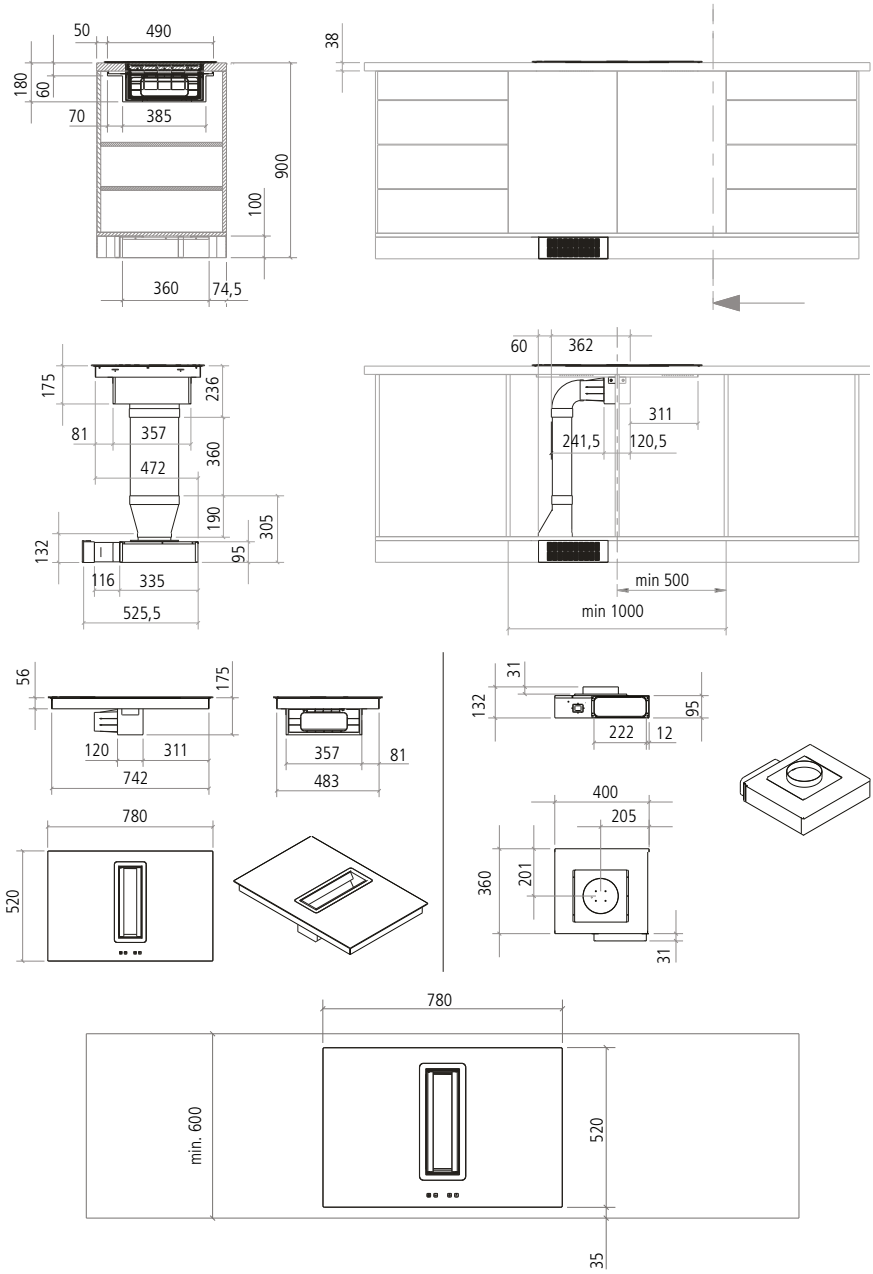

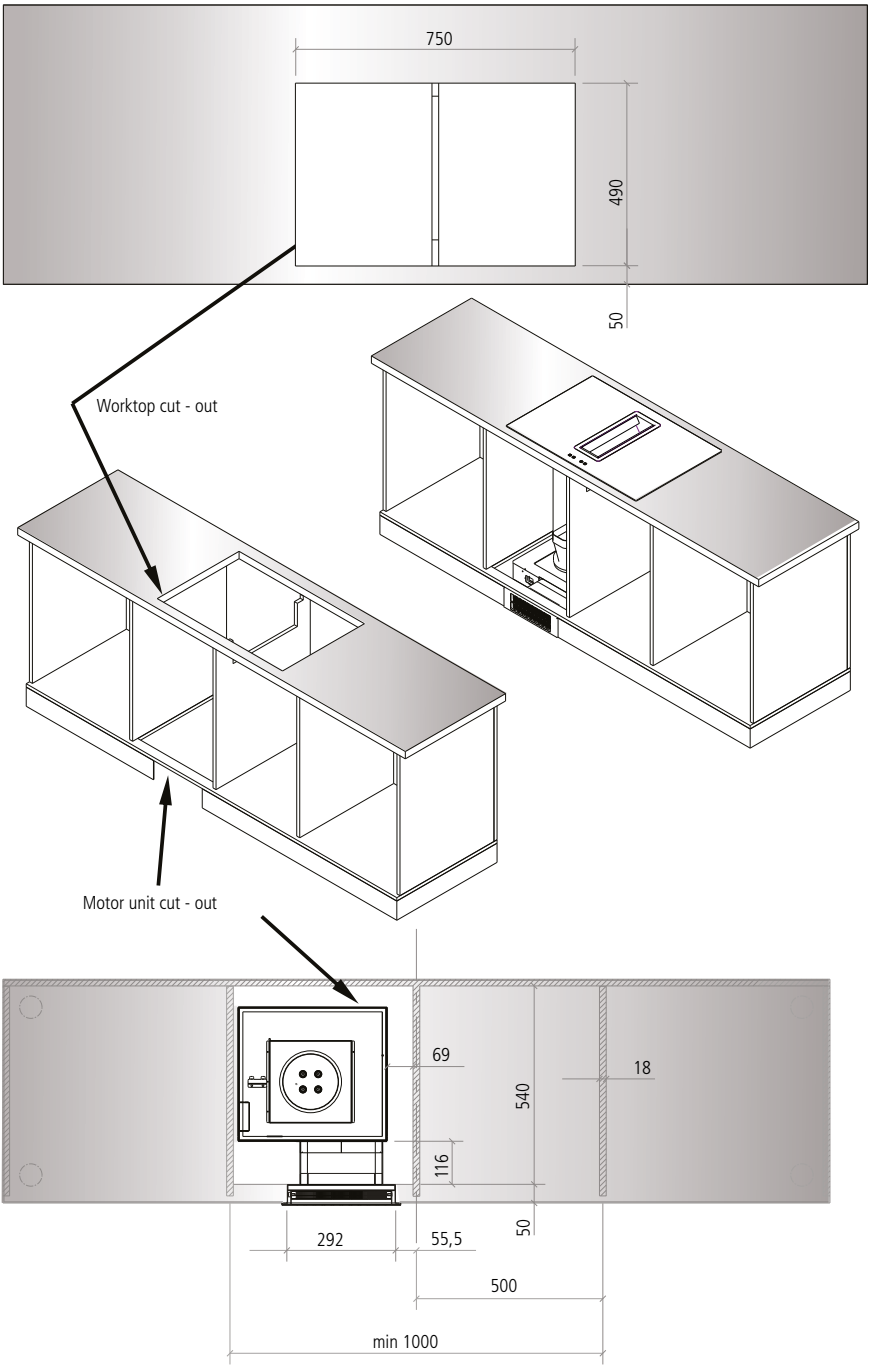
750
490
50
Worktop cut - out
Motor unit cut - out
69
18
540
116
50
292
55,5
500
min 1000

STANDARD 60CM WORKTOP INSTALLATION [EXTERNALLY DUCTED WITHOUT CARBON FILTER]

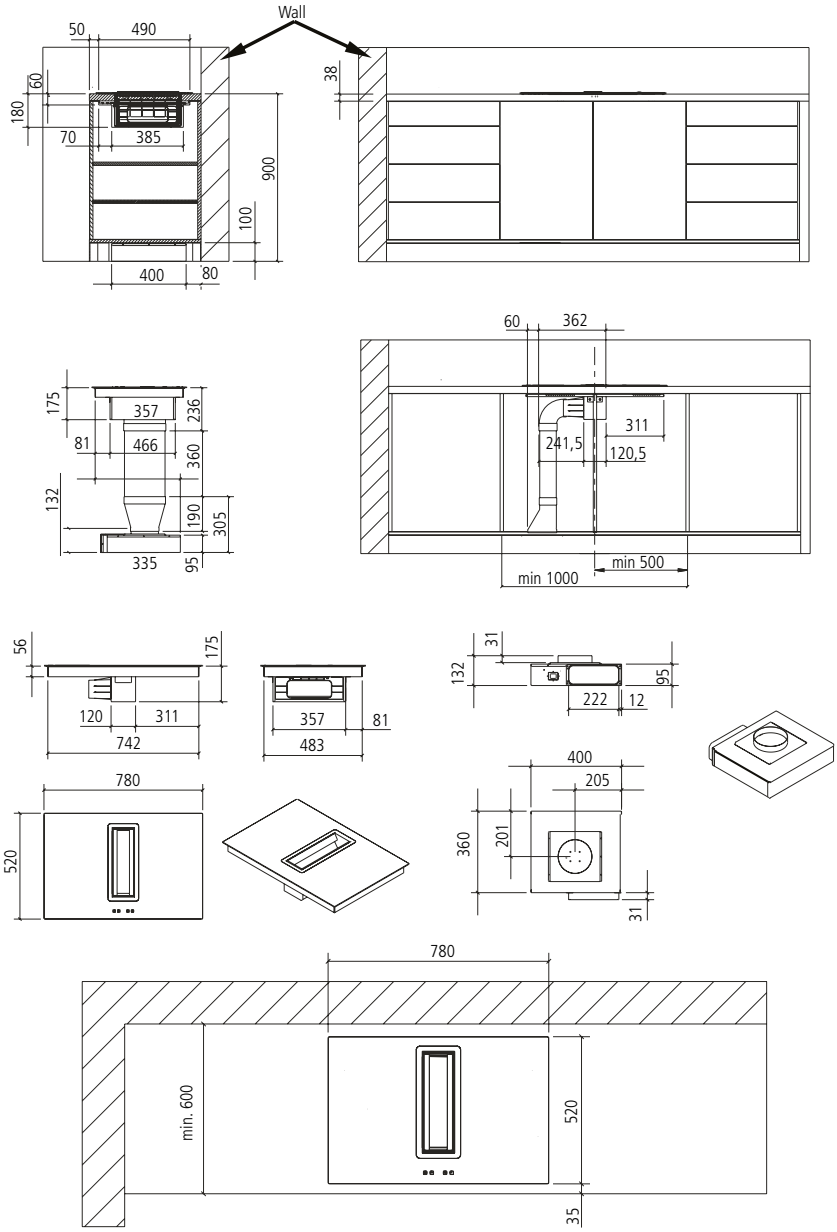

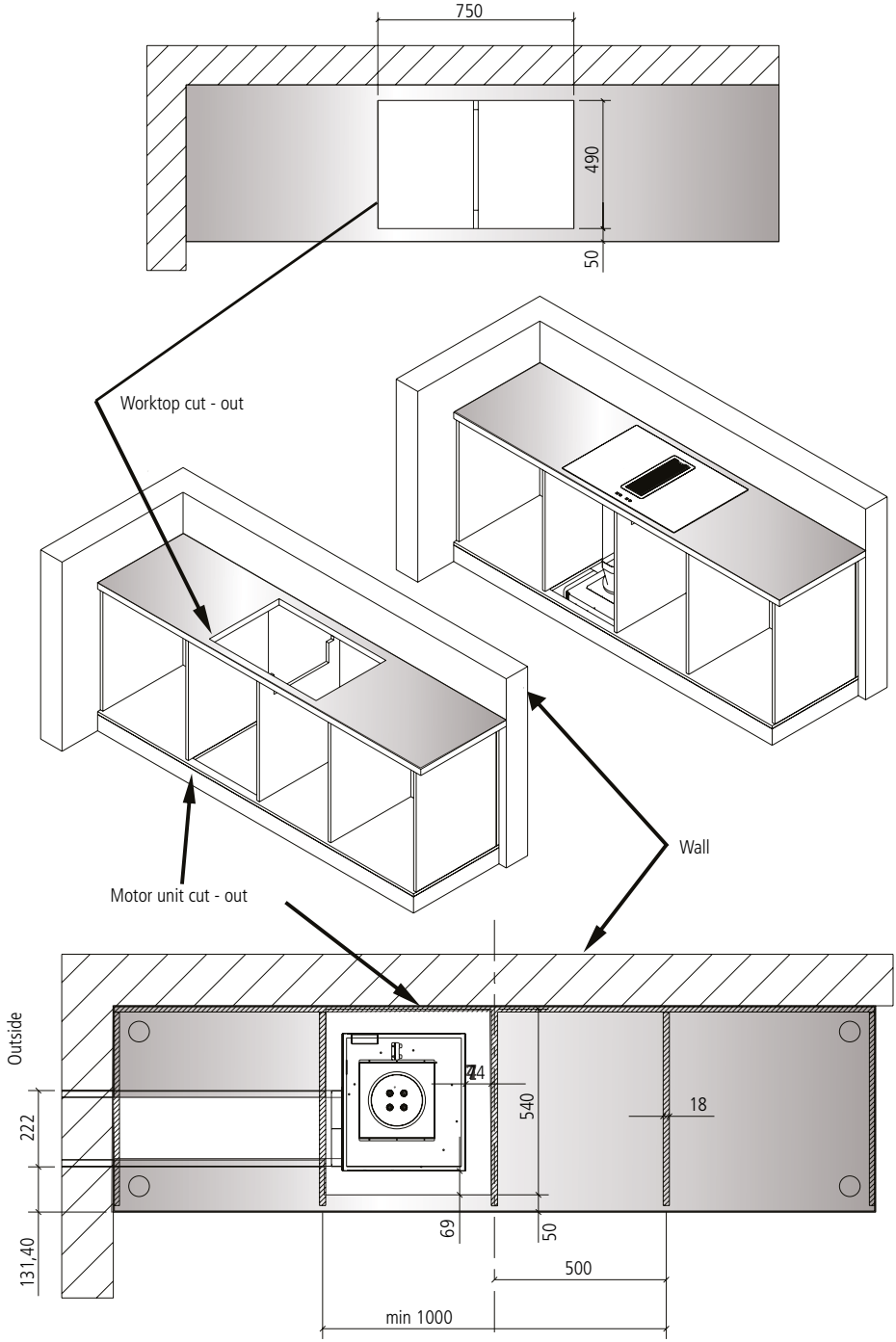
750
490
50
Worktop cut - out
Wall
Motor unit cut - out
Outside
222
131,40
74
540
18
69
50
500
min 1000

PRODUCT OVERVIEW

NOTE:

Specifications for the product vary and the appearance of your appliance may differ from that shown in the figures below.

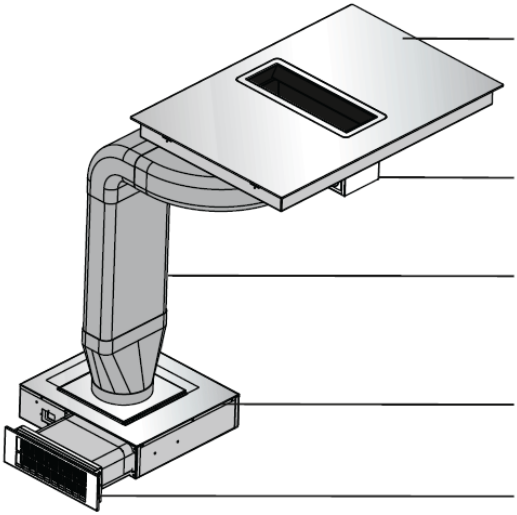

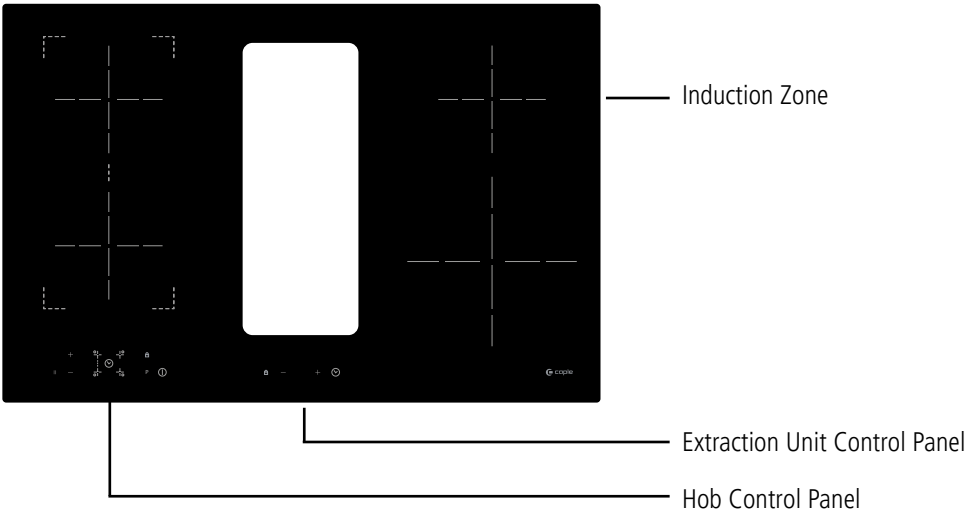

COOKWARE

Cookware for induction cooking zones must be made of metal and have magnetic properties. The base must be sufficiently large. See the following table for the recommended minimum pan base diameters.

COOKING ZONE DIMENSIONS (MM)	RECOMMENDED PAN BASE MIN. DIAMETER (MM)
160	Ø110
210	Ø110
210 x 190	Ø160

Only use pans with a base suitable for induction.

SUITABLE COOKWARE	UNSUITABLE COOKWARE
Enamelled steel pots with a thick base	Pots made of copper, stainless steel, aluminium, oven-proof glass, wood, ceramic and terracotta
Cast iron pots with an enamelled base	
Pots made of multi-layer stainless steel, stainless ferrite steel and aluminium with special base	

NOTE:

The quality and composition of the cookware has a direct effect on cooking performance. Cookware with enamelled steel, aluminium or copper bottoms can cause a metallic residue to remain on the hob. If left, this becomes difficult to remove.

Clean the hob after every use.

MAGNET TEST:

When purchasing new pans, check the packing to confirm they can be used with induction hobs. Alternatively, the suitability of pans can be checked with a small magnet, if it sticks, it is likely to be compatible. You will also need to take into account other factors such as the pan size and shape.

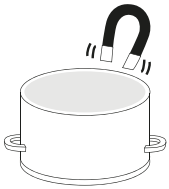

NOTE:

When using pans suitable for induction, you may hear various noises coming from them, this is due to the design of the pans and does not affect the performance or safety of the hob.

SUITABLE COOKWARE:

The base of the pan must be flat and smooth.
Cookware must be placed centrally on the hob.

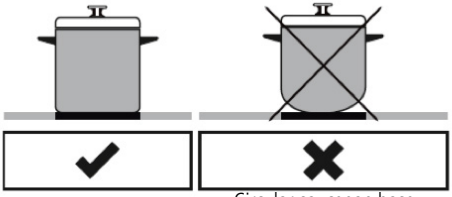

Circular saucepan base

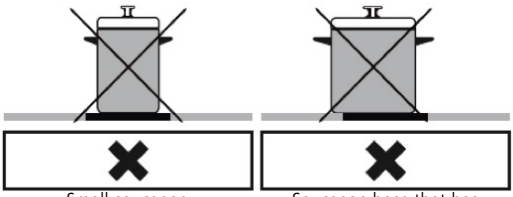

Small saucepan diameter

Saucepan base that has not settled

UNSUITABLE COOKWARE:

The base of the pan is curved.
The electronic unit cannot determine the temperature correctly.

ENERGY SAVING TIPS:

- The following are a few useful hints to help you cut your consumption of energy and use your new induction hob and the cookware efficiently.
- The base of your cooking pans should be the same size as the cooking zone.
- When buying cooking pans, note that it is frequently the diameter of the top of the pan that it indicated. This is usually larger than the base of a pan.
- Pressure cookers are particularly low on energy and time cooking required, thanks to the pressure and the fact that they are tightly closed. Short cooking times mean that vitamins are preserved.
- Always make sure that there is sufficient fluid in your pressure cooker since the cooking zone and the cooker may be damaged as a result of overheating if the pressure cooker boils dry.
- Always close cooking pots with a suitable lid.
- Use the right sized pan for the quantity of food you are cooking. A large pan which is hardly filled will use up a lot of energy.

POWER SETTINGS

The heating power of the cooking zones can be set at various power levels. In the chart you will find examples of how to use each setting (for guidance only).

SETTINGS	CLASS
0	Element off
1-3	Delicate warming
4-5	Gentle simmering, slow warming
6-7	Reheating and rapid simmering
8	Boiling, saute and searing
9	Maximum heat
P	Boost function

HOB CONTROLS

The appliance is operated by pressing the touch controls and the functions are confirmed by displays and audible sounds.

TOUCH CONTROL UNIT

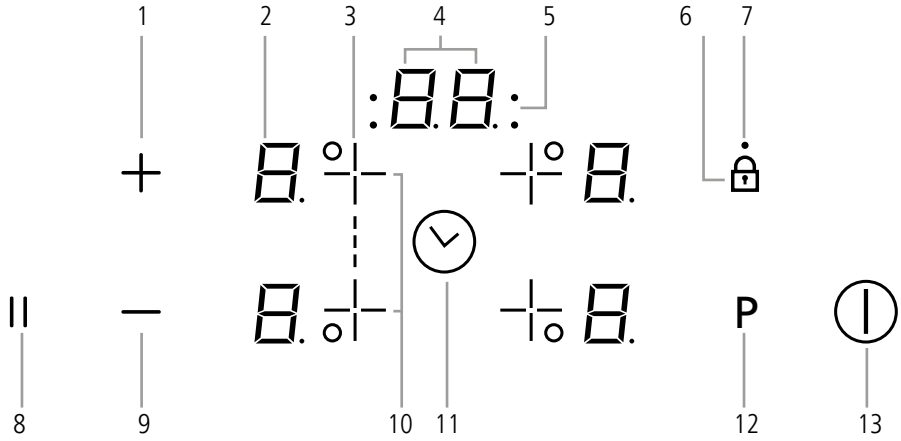

1. Increase power setting / timer
2. Power display
3. Cooking zone selection
4. Timer display
5. Timer function cooking zone indicator
6. Key lock
7. Key lock indicator
8. Smart Pause
9. Decreased power setting / timer
10. Bridge zone selection
11. Timer selection
12. Boost
13. On / Off

After mains voltage is applied, all displays are illuminated briefly. After this, the hob is in stand-by mode and ready for operation.

The hob is controlled by pressing the appropriate electronic button. Each button pressed is followed by a buzzer sound.

SWITCHING THE HOB ON

Switch the hob on by pressing the ON/OFF button ⏻. All cooking zone displays will show a static "**0**" and the bottom right dots blink. (If a cooking zone is not selected within 20 seconds, the hob will automatically switch off).

SWITCHING THE HOB OFF

Switch the hob off at any time by pressing ⏻. The ON/OFF button ⏻ always has priority over the switch-off function.

SWITCHING THE COOKING ZONES ON

Press the cooking zone selection button that corresponds to the zone you wish to use. A static dot will be shown on the selected zone display and the blinking dots on all other zone displays will no longer illuminate.
Select the temperature setting by using the increase power setting button ⊕ or decrease power setting button ⊖ . The zone is now ready to use. For faster boil times, select the desired power level, then touch the '**P**' button to activate the Boost function.

SWITCHING THE COOKING ZONES OFF

Select the zone you want to switch off by pressing the cooking zone selection button. Using the ⊖ button, turn the power down to "**0**". (Pressing the ⊕ and ⊖ buttons simultaneously also turns the power to "**0**"). If the cooking zone is hot, "**H**" will be displayed instead of "**0**".

SWITCHING ALL COOKING ZONES OFF

To switch all the cooking zones off at once, press the ⏻ key. In the stand-by mode, a "**H**" will appear on all cooking zones which are hot.

RESIDUAL HEAT INDICATOR

The residual heat indicator indicates that the glass ceramic area has a temperature that is dangerous to touch. After switching off the cooking zone, the respective display will show "**H**" until the corresponding cooking zone temperature is at a safe level.

SWITCHING THE BRIDGE ZONE ON

Press the front left and rear left cooking zone selection buttons simultaneously. A static dot will be shown on the left heater display. The other displays will show '**b**' and '**r**' and the blinking dots will no longer be displayed.
Select the temperature required by using the increase power setting button ⊕ or decrease power setting button ⊖. The bridge zone will be ready to use. For the fastest boil time, select the desired power level, then press the "**P**" key to activate the Boost function.

SWITCHING THE BRIDGE ZONE OFF

To select the Bridge element, press the rear left or front left cooking zone selection button and using the ⊖ button, turn the level down to "**0**". Alternatively, pressing the ⊖ and ⊕ keys simultaneously will change the level to "**0**". If the bridge cooking zone is hot, "**H**" will be displayed.

SMART PAUSE

Smart Pause, when activated, reduces the power of all cooking zones that have been switched on. If you then deactivate the Smart Pause, the zones will automatically return to the previous power level.
If the Smart Pause is not de-activated, the hob will switch off after 30 minutes.
Press "**II**" to activate Smart Pause. The power for the activated heater(s) will reduce to level 1 and "**II**" will appear at all displays.
Press "**II**" again to deactivate Smart Pause. "**II**" will disappear and the heaters will now run at the level previously set.

AUTOMATIC SAFETY SHUT-OFF FUNCTION

A cooking zone will automatically switch off if the power setting has not been modified for a specified duration of time. A change in the power setting of the cooking zone will reset the time duration to the initial value. This initial value depends on the selected power level, as shown below.

POWER SETTINGS	AUTO SAFETY SHUT-OFF AFTER
1-2	6 hours
3-4	5 hours
5	4 hours
6-9	1.5 hours

CHILD LOCK

After switching on the appliance, the child lock function can be activated. To activate the child lock, simultaneously press the increase power setting button ⊕ and decrease power setting button ⊖ and then press the increase power setting key ⊕ again. "**L**" indicating LOCKED will appear on all zone displays and the controls cannot be used. (If a cooking zone is in the hot condition, "**L**" and "**H**" will display alternately).
The hob will remain in a locked condition until it is unlocked, even if the appliance has been switched off and on.
To deactivate the child lock, first switch on the hob. Simultaneously press the increase power setting button ⊕ and decrease power setting button ⊖ and then press the decrease power setting button ⊖ again. "**L**" will no longer be displayed and the hob will switch off.

KEY LOCK

The key lock function is used to set 'safe mode' on the appliance during operation. It will not be possible to make any adjustments by touching the buttons (for example power settings). It will only be possible to switch the appliance off.
The lock function is active if the key lock button 🔒 is pressed for at least 2 seconds. This operation is acknowledged by a buzzer. After successful operation, the key lock indicator will flash and the keys will be locked.

TIMER FUNCTION

The timer function operates in two ways, as follows.

MINUTE MINDER TIMER (1-99 MIN.)

The minute minder timer can be operated if the cooking zones are switched off. The timer display will show "**00**" with a blinking dot.

Turn the hob on by pressing and holding the power button ⏻. Press the timer button ⌚ to enter the minute minder mode. Press ⊕ to increase the time or press ⊖ to decrease the time. The range is between 0 and 99 minutes. If there is no adjustment to the displayed time within 10 seconds, the minute minder timer will be set and the blinking dot will disappear. Once the timer is set, it begins to count down.
When the timer reaches zero, a signal will sound and the timer display will blink. The sound signal will stop automatically after 2 minutes and/or by pressing any button.
The minute minder timer can be changed or switched off at any time by using the timer setting button ⌚ and/or the decrease timer button ⊖ .Switching off the hob by pressing ⏻ at any time will also switch off the minute minder timer.

COOKING ZONE TIMER (1-99 MIN.)

When the hob is switched on, an independent timer can be programmed for every cooking zone. Select a cooking zone, then select the power setting and finally, enter the cooking zone timer mode by pressing the Timer button twice. Once activated, one of the four red LED's arranged around the timer will flash to indicate which zone you are setting the timer for. Use the ⊕ and ⊖ keys to adjust the cooking zone timer, and once set, wait for 5 seconds for the minute minder to confirm (red LED will stop flashing once set and remain on until the timer elapses).10 seconds after the last operation, the timer display will change to the timer that will run out next (in cases where a timer is set on more than one cooking zone).
When the timer has run down, a signal will sound, the timer display will show "**00**" and the assigned cooking zone timer LED will blink. The programmed cooking zone will switch off and "**H**" will be displayed if the cooking zone is hot.
The sound signal and the blinking of the timer LED will stop automatically after 2 minutes and/or by pressing any button.

To cancel the cooking zone timers, enter the timer mode for the relevant zone following the instructions above, and reduce the time remaining to '00'.

BUZZER

While the hob is in operation, the following activities will be signalled by the buzzer.

Normal button activation will be accompanied with a short sound signal.

Continuous button operation over a longer period of time (10 seconds) will be accompanied with a longer, intermittent sound signal.

BOOST FUNCTION

To use this function, select a cooking zone and set the desired power level, then press the "**P**" (Boost) button.
The Boost function can only be activated if it is applicable with the cooking zone selected. If the Boost Function is active, a "**P**" is shown on the corresponding display.
Activating the booster can exceed the maximum power, in which case the integrated power management will be activated.
The necessary power reduction is shown by the corresponding cooking zone display blinking. Blinking will be active for 3 seconds to allow for further adaptations of the settings before power reduction.

EXTRACTOR CONTROLS

TOUCH CONTROL UNIT

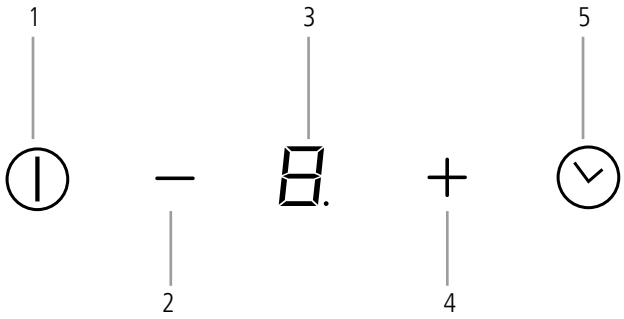

1. Extractor On / Off
2. Decrease fan speed
3. Fan speed display
4. Increase fan speed
5. Timer selection

SWITCHING THE EXTRACTOR ON/OFF

Press the air extraction on/off button. After that "**0**" appears on the digital display. You can use the ⊕ and ⊖ buttons to set the speed of the fan.

To turn off the fan, press the air extraction on/off button.

INCREASING THE EXTRACTOR FAN SPEED

Increase the fan speed by pressing the ⊕ button.

DECREASING THE EXTRACTOR FAN SPEED

DECREASE THE FAN SPEED BY PRESSING THE ⊖ BUTTON.

TIMER FUNCTION

If while the device is running on any level and the button is pressed, a 15-minute timer (delayed automatic shut-off) will be activated. As soon as the timer starts counting down, the speed value on the digital display will start flashing. After 15 minutes, all functions that were activated prior to the timer, will shut down.

NOTE:

When the delayed automatic shut-off has been activated, the speed value on the digital display will start flashing. Pressing the button again deactivates the delayed automatic shut-off.

FILTER CLEANING MESSAGE

When "L" is displayed on the digital screen, the metal grease filter must be cleaned.
To remove the metal grease filter cleaning prompt, proceed as follows:
After the cleaning has been completed press the button, until " E " appears on the screen.

CLEANING AND MAINTENANCE

HOB CLEANING

WARNING:

Switch off the appliance and allow it to cool before cleaning is to be carried out.

- Check whether the cleaning materials are appropriate and recommended by the manufacturer before use on your appliance.
- Use cream cleaners or liquid cleaners which do not contain particles. Do not use caustic (corrosive) creams, abrasive cleaning powders, rough wire wool or hard tools as they may damage the hob surfaces.
- Do not use cleaners that contain particles, as they may scratch the glass, enamelled and/or painted parts of your appliance.
- Should any liquids overflow, clean them immediately to avoid parts becoming damaged.
- Do not use steam cleaners for cleaning any part of the appliance.

CLEANING THE CERAMIC GLASS

Ceramic glass can hold heavy utensils but may be broken if it is hit with a sharp object.

WARNING:

If the surface is cracked, to avoid the possibility of an electric shock, switch off the appliance and call Caple service.

- Use a cream or liquid cleaner to clean the vitroceramic glass. Then, rinse and dry them thoroughly with a dry cloth.
- Do not use cleaning materials meant for steel as they may damage the glass.
- If substances with a low melting point are used in the cookware's base or coatings, they can damage the glass- ceramic hob. If plastic, tin foil, sugar or sugary foods have fallen on the hot glass-ceramic hob, please scrape it off the hot surface as quickly and as safely as possible. If these substances melt, they can damage the glass. When you cook very sugary items like jam, apply a layer of a suitable protective agent beforehand if it is possible.
- Dust on the surface must be cleaned with a wet cloth.
- Any changes in colour to the ceramic glass will not affect the structure or durability of the ceramic and is not due to a change in the material.

Colour changes to the ceramic glass may be for a number of reasons:

- Spilt food has not been cleaned off the surface.
- Using incorrect pans on the hob will erode the surface.
- Using the wrong cleaning materials.

CLEANING THE STAINLESS-STEEL PARTS

- Clean the stainless-steel parts of your appliance on a regular basis.
- Wipe the stainless-steel parts with a soft cloth soaked in only water. Then, dry them thoroughly with a dry cloth.
- Do not clean the stainless-steel parts while they are still hot from cooking.
- Do not leave vinegar, coffee, milk, salt, water, lemon or tomato juice on the stainless steel for a long time.

CLEANING THE METAL GREASE FILTER

WARNING:

Fire hazard due to grease and fat residues inside the metal grease filter.
There is a risk of fire due to fatty deposits in the metal grease filter.

- Clean the metal grease filter as soon as the instruction for cleaning the filter appears on the display "C", or at least every 2 weeks.
- Never operate the extractor without the metal grease filter.

REMOVE THE METAL GREASE FILTER

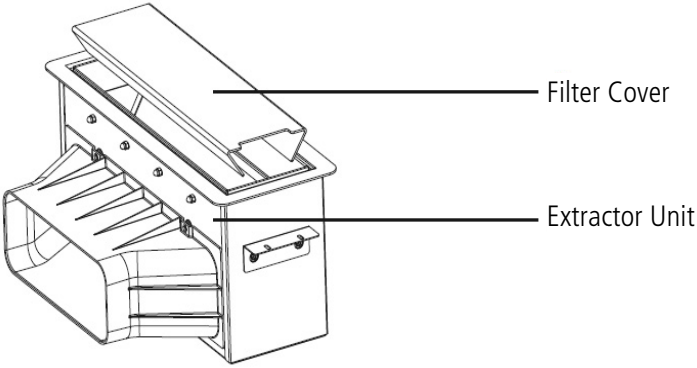

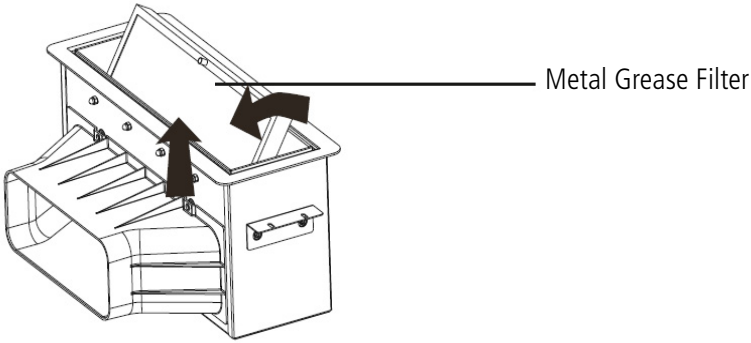

Remove the top filter cover, and place safely away from the hob.

Remove the metal grease filter by pulling forward and then lifting upwards, using the small handle attached.

Rinse the metal grease filter by hand or in the dishwasher.

Once cleaned, reverse these steps to reinsert the metal grease filter, and if necessary, remove the cleaning warning in the extractor display.

MANUAL CLEANING

NOTE:

Incorrect cleaning or use of unsuitable cleaning agents can cause damage.

Let the metal grease filter soak in warm soap water and clean it using a soft brush.

Rinse with water the metal grease filter with warm water.

Place the metal grease filter loosely and vertically without adding other tableware into the dishwasher.

Start any program with a temperature of no higher than 55°C.

Due to the cleaning in the dishwasher, the filter parts may experience slight changes in their colour. This does not affect function or performance to the metal grease filter.

AFTER CLEANING:

Put the metal grease filter on an absorbent pad to dry before reinserting into the extraction unit.

CLEANING THE DRIP CONTAINER

To collect water and food waste, the air extraction unit has a container that sits in the centre of the hob.

› Pull up the container inside the air extraction unit slot.

› After cleaning, reinsert the container.

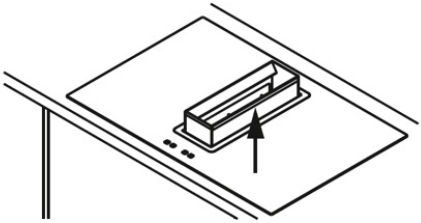

NOTE:

The drip container can be cleaned in the dishwasher.

CLEANING OR REPLACING ACTIVATED CHARCOAL FILTER (RECIRCULATION ONLY)

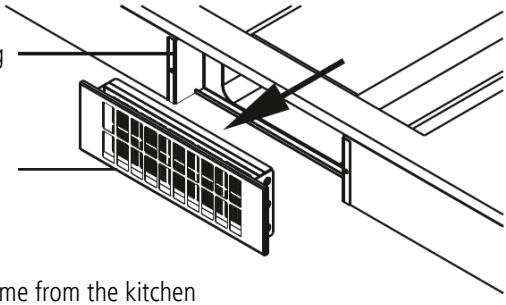

1. Remove the activated carbon filter and frame from the kitchen plinth, by pulling towards the front. (This is held with magnets).

2. Unscrew the connecting screw.

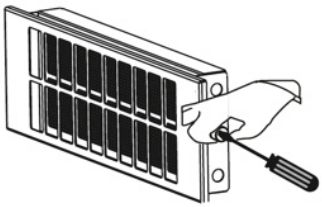

3. Remove the activated carbon filter form the filter frame as shown.

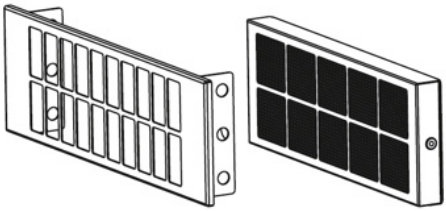

WARNING:

Place the case on a firm surface, then push the filter down slightly to remove it.

4. Allow the activated charcoal filter to regenerate for one hour inside the baking oven at about 200°C. After cooling down, reinsert the filter into the hood.
5. This procedure may be repeated no more than 10 times. After that, the filter must be replaced by a new one.
6. Re-insert the activated carbon filter by performing the previous steps in reverse order. To purchase replacement charcoal filters (CAP81CF), visit **www.caple.co.uk.**

MAINTENANCE INTERVALS

NOTE:

The appliance performance will be negatively impacted by any non-compliance with the maintenance intervals.

In case of overlong use, the metal grease filter as well as the activated charcoal filter will be clogged with fat and dirt particles, which will negatively impact the device performance.

Please observe all maintenance intervals specified in this manual.

INTERVAL	MAINTENANCE TASK
After assembling and in case of heavy contamination	Outside cleaning of the device
After cleaning the extractor hood	Servicing the device
Every other week or when the grease filter prompt appears	Cleaning the metal grease filter
Every 3 month or in case of decreasing performance	Cleaning or replacing the activated carbon filter (for circulation fan operation only)

TRANSPORT

If you need to transport the product, use the original product packaging and carry it using its original case. Follow the transport signs on the packaging. Tape all independent parts to the product to prevent damaging the product during transport.

If you do not have the original packaging, prepare a carriage box so that the appliance, especially the external surfaces of the product, is protected against external threats.

TROUBLESHOOTING

You can solve many common Induction Hob problems easily, saving you the cost of a possible service call. Try the suggestions below to see if you can solve the problem before calling Caple Service.

PROBLEM	POSSIBLE CAUSE	SOLUTION
Hob control card's display is blacked out. The hob or cooking zones cannot be switched on	There is no power supply	Check the household fuse for the appliance. Check whether there is a power cut by trying other electronic appliances
The hob switches off while it is in use and an "F" flashes on each display	The controls are damp or an object is resting on them	Dry the controls or remove the object
The hob switches off while it is in use	One of the cooking zones has been on for too long	You can use the cooking zone again by switching it back on
The hob controls are not working and the child lock LED is on	Child lock is active	Switch off the child lock
The saucepans make noise during cooking or your hob makes a clicking sound during cooking	This is normal with induction hob cookware. This is caused by the transfer of energy from the hob to the cooker	This is normal. There is no risk, neither to your hob nor to your cookware.
The "U" symbol lights up in the display of one of the cooking zones	There is no pan on the cooking zone, or the pan is unsuitable	Use a suitable pan
Power level 9 or "P" is automatically reduced. If you select power level "P" or 9 on two cooking zones, which are on the same side, at the same time	Maximum power level for the two zones is reached	Operating both zones at power level "P" or 9 would exceed the permitted maximum power level for the two zones

If the problem persists or more help is required, please contact our Caple service team on **0117 938 7420** or via email **service@caple.co.uk**

HOB ERROR CODES

ERROR CODES	
If there is an error, an error code will be shown on the heater display	
E1	Cooling fan is disabled. Call Caple Service.
E3	Supply voltage is other than the rated values. Switch the hob off by pressing ⏻, wait until 'H" disappears for all zones, switch the hob on by pressing ⏻ and continue to use. If the same error is displayed again, call Caple Service.
E4	Supply frequency is different from the rated values. Switch the hob off by pressing ⏻, wait until 'H" disappears for all zones, switch the hob on by pressing ⏻ and continue to use. If the same error is displayed again, switch the plug for the appliance off and on. Switch the hob on by pressing ⏻ and continue to use. If the same error is displayed again, call Caple Service.
E5	Internal temperature of the hob is too high, switch the hob off by pressing ⏻ and let the heaters cool down.
E6	Communication error between the touch control and heater. Call an authorised service agent.
E7	Coil temperature sensor is disabled. Call Caple Service.
E8	Cooler temperature sensor is disabled. Call Caple Service.
E9	Incompatible cookware has been used or the cookware as been moved too quickly in a short amount of time. See 'COOKWARE' section for suitable cookware.
I-	Incompatible cookware has been used. See 'COOKWARE' section for suitable cookware.
EA	Larger coil saturation error. Switch the hob off by pressing on/off button, switch the hob on by pressing on/off and continue to use. If the same error is displaying again, call Caple Service.
EC	Supply voltage error. Switch the hob off by pressing on/off button, switch the hob on by pressing on/off and continue to use. If the same error is displaying again, call Caple Service.
C1-C8	Microprocessor alert. Switch the hob off by pressing on/off button, switch the hob on by pressing on/off and continue to use. If the same error is displaying again, call Caple Service.

AFTER SALES SERVICE

Any maintenance operation on your appliance should be carried out by:

› Either your retailer;

› Or another Caple approved engineer or similar qualified person.

If a problem still persists and further assistance is required, please contact our Caple after sales team on:

T - 0117 938 7420

E - service@caple.co.uk

NOTES

Caple Service
Fourth Way
Avonmouth
Bristol

BS11 8DW
T: 0117 938 1900
E: service@caple.co.uk
www.caple.co.uk