CE950

Caple round ceiling extractor

Technical information

CE950

Caple round ceiling extractor

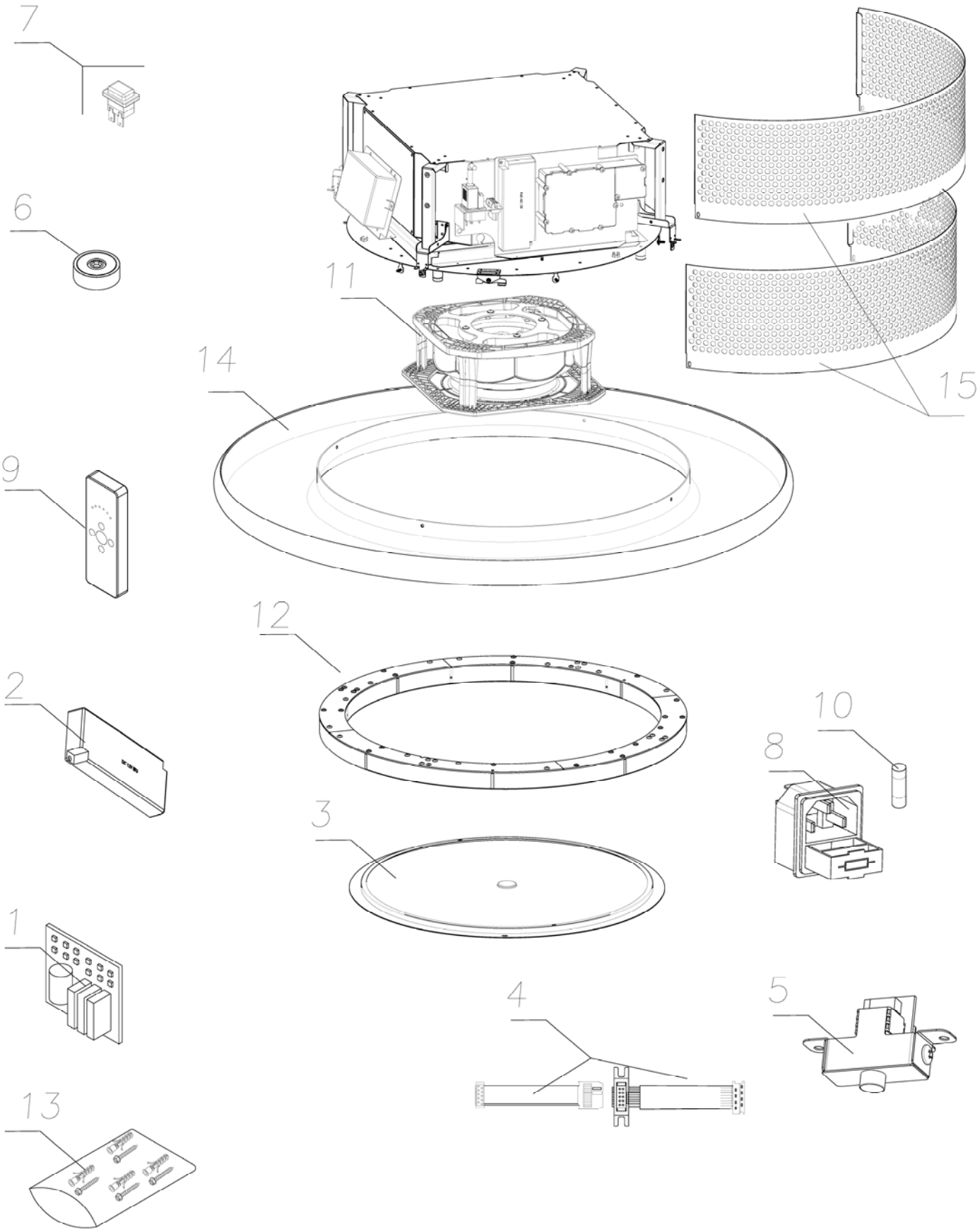

CE950 - Caple round ceiling extractor

Item	Part Code	Description	Qty
1	75007026011	MAIN PRINT SLT/E EL SINGLE-SPEED	1
2	75007026320	TRANSFORMER DC 12V EFU 122320	1
3	75007026025	CR700 GREASE FILTER	1
4	75007026537	FLAT SPEED INDICATOR	1
5	75007026962	SPEED INDICATOR SILT26 - SLT962	1
6	75007026155	MAGNET 15X5	1
7	75470199999	EMERGENCY SWITCH/START NEON	1
8	75007026063	CONNECTOR	1
9	75470140400	REMOTE CONTROL	1
10	75007026520	FUSE 5X20 2 AMPERE	1
11	75007026601	MOTOR EBM K2E220-RB0601	1
12	75007026540	LED CIRCLE	1
13	75007026100	ACCESSORIES SILT26	1
14	75007026901	EXTERNAL RING SLT962 WHITE	1
15	75007026101	STAINLESS STEEL CHIMNEY SLT962	1