caple

Combination Microwave Instruction Manual

CM126

Contact Caple on 0117 938 7420 for spare parts or www.caple.co.uk

CONTENTS

Warnings	3
Environmental Protection	11
Warranty	11
Cleaning	13
Utensils	14
Setting Up Your Microwave	17
Installation	18
Operation Instructions	22
Trouble Shooting	30
Technical Data	31
Caple Contact Details	32

SAFETY INSTRUCTIONS

Read carefully all the instructions contained in this manual. It provides you with important information regarding the safe installation, use and maintenance of the appliance as well as useful advice for getting the best out of your microwave oven. Keep this booklet in a safe place for future reference. After removing the packing, check that the appliance is not damaged in any way.

Be careful not to leave the packing materials [plastic sheeting, expanded polystyrene etc.] where children can get at them, as they can be dangerous.

IMPORTANT:

Do not use the oven door handle to move the appliance, such as to remove it from the packaging.

ATTENTION:

The microwave oven is an appliance which, for its nature, becomes hot during use, especially the glass door.

It is therefore a good rule that children do not approach the microwave oven when it is functioning, particularly when the grill is in use.

Never roast or bake on the oven base.

This appliance is intended to be used in household and similar applications such as:

› Staff kitchen areas in shops, offices and other working environments.
› Farm Houses.
› By clients in hotels, motels and other residential type environments.
› Bed and breakfast type environments.

The electrical system of this appliance may be used safely only when it is correctly connected to an efficient earthing system in compliance with the safety standards currently in effect.

The manufacturer will not be held liable for any damages that might arise out of incorrect or improper use of the appliance.

The following items are potentially dangerous, and therefore, appropriate measures must be taken to prevent children and the disabled from coming into contact with them:

- Controls and the appliance in general
- Packaging [bags, polystyrene, nails, etc.]
- The appliance immediately after use of the oven or grill due to the heat generated.
- The appliance when no longer in use [potentially dangerous parts must be made safe].

WARNING:

Accessible parts will become hot when in use. To avoid burns and scalds children should be kept away.

During use the appliance becomes hot, care should be taken to avoid touching heating elements inside the oven.

- If the door or door seals are damaged, the oven must not be operated until it has been repaired by a Caple approved engineer.
- It is hazardous for anyone other than a competent person to carry out any service or repair operation that involves the removal of a cover which gives protection against exposure to microwave energy.
- Liquids and other foods must not be heated in sealed containers since they are liable to explode.
- Only use utensils that are suitable for use in microwave ovens.
- When heating food in plastic or paper containers, keep an eye on the oven due to the possibility of ignition.
- The microwave oven is intended for heating food and beverages. Drying of food or clothing and heating of warming pads, slippers, sponges, damp cloth and similar may lead to risk of injury, ignition or fire.
- The oven should be cleaned regularly and any food deposits removed.
- Failure to maintain the oven in a clean condition could lead to deterioration of the surface that could adversely affect the life of the appliance and possibly result in a hazardous situation.

WARNING:

To reduce the risk of burns, electric shock, fire, injury to persons or exposure to excessive microwave energy:

- Make sure that all the packing materials are removed from the inside of the door.

WARNING:

- Check the oven for any damage, such as a misaligned or bent door, damaged door seals and sealing surface, broken or loose door hinges and latches and dents inside the cavity or on the door. If there is any damage, do not operate the oven and contact Caple service immediately.
- This microwave oven must be placed on a flat, stable surface to hold its weight and the heaviest food likely to be cooked in the oven.
- Do not place the microwave oven where heat, moisture, or high humidity are generated, or near combustible materials.
- Do not operate the microwave oven when empty.
- Do not operate this appliance if it has a damaged cord or plug, if it is not working properly or if it has been damaged or dropped. If the supply cord is damaged, it must be replaced by Caple or an approved engineer in order to avoid a hazard.
- Microwave heating of liquids can result in delayed eruptive boiling, therefore care has to be taken when handling the container.

- Do not fry food in the microwave oven. Hot oil can damage oven parts and utensils and even result in skin burns.
- Eggs in their shell and whole hard-boiled eggs should not be heated in microwave ovens since they may explode even after microwave heating has ended.
- Pierce foods with heavy skins such as potatoes, whole squashes, apples and chestnuts before cooking.
- The contents of feeding bottles and baby jars should be stirred or shaken and the temperature should be checked before serving in order to avoid burns.
- Utensils should be checked to ensure that they are suitable for use in microwave oven.

WARNING:

Liquid or other food must not be heated in sealed containers since they are liable to explode.

WARNING:

It is hazardous for anyone other a trained person to carry out any service or repair operation which involves the removal of any cover which gives protection against exposure to microwave energy.

- This appliance is not intended for use by persons [including children] with reduced physical, sensory or mental capabilities, or lack of experience and knowledge, unless the have been given supervision or instruction concerning use of the appliance by a person responsible for their safety.
- Children should be supervised to ensure that they do not play with the appliance.
- When heating food in plastic or paper containers, check the oven frequently for the possibility of ignition.
- Remove wire ties from paper or plastic bags before placing bag in oven.
- If smoke is observed. Switch off or unplug the appliance and keep the door closed in order to stifle any flames.
- Do not leave paper products, cooking utensils or food in the cavity when not in use.

WARNING:

The appliance and its accessible parts become hot during use.

Care should be taken to avoid touching heating elements.

Children less than 8 years of age shall be kept away unless continuously supervised.

This appliance can be used by children aged from 8 years and above and persons with reduced physical, sensory or mental capabilities or lack of experience and knowledge if they have been given supervision or instruction concerning use of the appliance in a safe way and understand the hazards involved. Children shall not play with the appliance. Cleaning and user maintenance shall not be made by children without supervision.

During use the appliance becomes hot. Care should be taken to avoid touching heating elements inside the oven.

WARNING:

Accessible parts may become hot during use. Young children should be kept away.

Do not attempt to operate this oven with the door open as this can result in harmful exposure to microwave energy. It is important not to break or tamper with the safety interlocks.

Do not place any objects between the oven front face and the door or allow soiling or cleaner residue to accumulate on sealing surfaces.

If the door or door seals are damaged, the oven must not be operated until it has been repaired by a competent engineer.

Electric shock hazard:

- Improper use of the grounding can result in electric shock. Do not plug into an outlet until the appliance is properly installed and grounded.
- This appliance must be grounded. In the event of an electrical short circuit, grounding reduces the risk of electric shock by providing an escape wire for the electric current. This appliance is equipped with a cord having a grounding wire with a grounding plug. The plug must be plugged into an outlet that is properly installed and grounded.
- Consult a qualified electrician or engineer if the grounding instructions are not completely understood or if doubt exists as to whether the appliance is properly grounded. If it is necessary to use an extension cord, only use a 3-wire extension cord.

A short power-supply cord is provided to reduce the risks resulting from becoming entangled in or tripping over a longer cord.

If a long cord set or extension cord is used:

- The marked electrical rating of the cord set or extension cord should be at least as great as the electrical rating of the appliance.
- The extension cord must be a grounding-type 3-wire cord.
- The long cord should be arranged so that it will not drape over the counter top or tabletop where it can be pulled on by children or tripped over unintentionally.

ENVIRONMENTAL PROTECTION

Waste electrical products should not be disposed of with household waste. Please recycle where facilities exist. Check with your Local Authority or retailer for recycling advice. This appliance is marked according to the European Directive on Waste Electrical and Electronic Equipment [WEEE].

By ensuring this product is disposed of correctly, you will help prevent potential negative consequences for the environment and human health, which could otherwise be caused by inappropriate waste handling of this product. The symbol on the product indicates that this product may not be treated as household waste. Instead it shall be handed over to the applicable collection point for the recycling of electrical and electronic equipment. Disposal must be carried out in accordance with local environmental regulations for waste disposal.

For more detailed information about treatment, recovery and recycling of this product, please contact your local council, your household waste disposal service or the retailer where you purchased the product.

CE DECLARATIONS OF CONFORMITY

This appliance has been manufactured to the strictest standards and complies with all applicable legislation, Low Voltage Directive [LVD] and Electromagnetic Compatibility [EMC].

UKCA DECLARATIONS OF CONFORMITY

This appliance has been manufactured to the strictest standards and complies with all applicable legislation.

WARRANTY:

Your new appliance is covered by warranty. The warranty card is enclosed - if it is missing, you must provide the following information to your retailer in order to receive a replacement: date of purchase, model and serial number [placed on the inside of the appliance storage drawer].
Registration can also be completed online by visiting www.caple.co.uk.
Ensure you keep your warranty card safe, you may need to show it to Caple Service together with proof of purchase.
If you fail to show your warranty card you will incur all repair charges.
Spare parts are only available from Caple Service and spare parts authorised centres.

ATTENTION:

- Before use, remove all plastic films protecting some parts of the appliance [fascia - panel, parts in stainless steel, etc.]
- Do not use the appliance to heat a room.
- When the appliance is not in use, we recommend you turn it off, isolate it from the electrical supply.
- If the apparatus is not maintained in a good state of cleanliness, its surface could be degraded and affect the lifespan of the apparatus and lead to a dangerous situation.

CLEANING

Be sure to unplug the appliance from the power supply before any cleaning.

1. Clean the cavity of the oven after using with a slightly damp cloth.
2. Clean the accessories in the usual way in soapy water.
3. The door frame and seal and neighbouring parts must be cleaned carefully with a damp cloth when they are dirty.
4. Do not use harsh abrasive cleaners or sharp metal scrapers to clean the oven door glass since they can scratch the surface, which may result in shattering of the glass.

CLEANING TIP:

For easier cleaning of the cavity walls: Place half a lemon in a bowl, add 300ml [1/2 pint] water and heat on 100% microwave power for 10 minutes. Wipe the oven clean using a soft, dry cloth.

UTENSILS

WARNING:

Personal Injury Hazard: It is hazardous for anyone other than a competent person to carry out any service or repair operation that involves the removal of a cover which gives protection against exposure to microwave energy.

There may be certain non-metallic utensils that are not safe to use for microwaving. If in doubt, you can test the utensil in question following the procedure below.

UTENSIL TEST:

- Fill a microwave-safe container with 1 cup of cold water [250ml] along with the utensil in question.
- Cook on maximum power for 1 minute.
- Carefully feel the utensil. If the empty utensil is warm, do not use it for microwave cooking.
- Do not exceed 1 minute cooking time.

MATERIALS YOU CAN USE IN A MICROWAVE OVEN:

UTENSILS	REMARKS
BROWNING DISH	Follow manufacturer's instructions. The bottom of the browning dish must be at least 5mm above the turntable. Incorrect usage may cause the turntable to break.
DINNERWARE	Microwave-safe only. Follow manufacturer's instructions. Do not use cracked or chipped dishes.
GLASS JAR	Always remove lid. Use only to heat food until just warm. Most glass jars are not heat resistant and may break.
GLASSWARE	Heat-resistant oven glassware only. Make sure there is no metallic trim. Do not use cracked or chipped dishes.
OVEN COOKING BAGS	Follow manufacturer's instructions. Do not close with a metal tie. Make slits to allow steam to escape.
PAPER PLATES AND CUPS	Use for short–term cooking/warming only. Do not leave oven unattended while cooking.
PAPER TOWELS	Use to cover food for reheating and absorbing fat. Use with supervision for a short-term cooking only.
PARCHMENT PAPER	Use as a cover to prevent splattering or a wrap for steaming.
PLASTIC	Microwave-safe only. Follow the manufacturer's instructions. Should be labelled "Microwave Safe". Some plastic containers soften, as the food inside gets hot. "Boiling bags" and tightly closed plastic bags should be slit, pierced or vented as directed by package.
PLASTIC WRAP	Microwave-safe only. Use to cover food during cooking to retain moisture. Do not allow plastic wrap to touch food.
THERMOMETERS	Microwave-safe only [meat and candy thermometers].
WAX PAPER	Use as a cover to prevent splattering and retain moisture.

MATERIALS TO BE AVOIDED IN A MICROWAVE OVEN:

UTENSILS	REMARKS
ALUMINIUM TRAY	May cause arcing. Transfer food into microwave-safe dish.
FOOD CARTON WITH METAL HANDLE	May cause arcing. Transfer food into microwave-safe dish.
METAL OR METAL-TRIMMED UTENSILS	Metal shields the food from microwave energy. Metal trim may cause arcing.
METAL TWIST TIES	May cause arcing and could cause a fire in the oven.
PAPER BAGS	May cause a fire in the oven.
PLASTIC FOAM	Plastic foam may melt or contaminate the liquid inside when exposed to high temperature..
WOOD	Wood will dry out when used in the microwave oven and may split or crack.

SETTING UP YOUR MICROWAVE

PARTS AND ACCESSORIES:

Remove the oven and all materials from the carton and oven cavity. Your oven comes supplied with the following accessories:

CONTENTS	QUANTITY
Glass Turntable	1
Turntable Ring Assembly	1
Instruction Mw anual	1

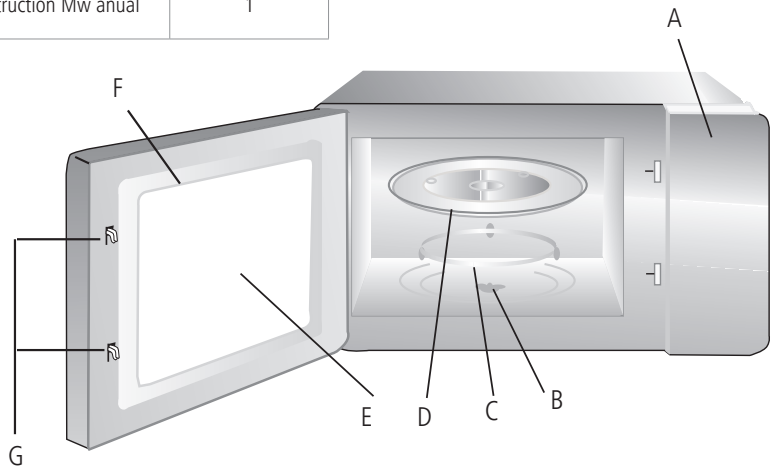

A. Control panel

B. Turntable shaft

C. Turntable ring assembly

D. Glass turntable

E. Observation window

F. Door assembly

G. Safety interlock system

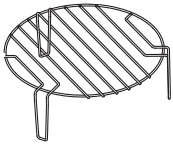

GRILL RACK

[Only to be used in the grill function and to be placed on the glass turntable]

INSTALLATION

TURNTABLE INSTALLATION

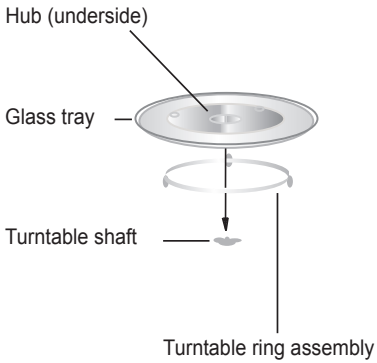

- Never place the glass tray upside down. The glass tray should never be restricted.
- Both the glass tray and turntable ring assembly must always be used during cooking.
- All food and containers of food must always be placed on the glass turntable for cooking.
- If glass tray or turntable ring assembly cracks or breaks, contact your nearest authorised Caple Service centre.

INSTALLATION AND CONNECTION

- This appliance is only intended for domestic use. The guarantee is void if used in any commercial application.
- This oven is intended for built-in use only. It is not intended for counter-top use or for use inside a cupboard.
- Please observe the detailed installation instructions.
- The appliance can be installed in a 60cm wide wall-mounted cupboard [at least 55cm deep and 85cm off the floor].
- The appliance is fitted with a plug and must only be connected to a properly installed earthed socket.
- The mains voltage must correspond to the voltage specified on the rating plate.
- The socket must be installed and the connecting cable must only be replaced by a qualified electrician. If the plug is no longer accessible following installation, an all-pole disconnecting device must be present on the installation side with a contact gap of at lease 3mm.
- Adapters, multi-way strips and extension leads must not be used. Overloading can result in a risk of fire.

WARNING:

The accessible surface may be hot during operation.

ELECTRICAL CONNECTION

NOTE:

The oven is fitted with a plug and must only be connected to a property installed earthed socket. The socket must only be installed and the connecting cable must only be replaced by a qualified electrician, and in accordance with the appropriate regulations. If the plug is no longer accessible following installation, an all-pole isolating switch must be present on the installation side with a contact gap of at least 3mm.

BUILT-IN FURNITURE

› The fitted cabinet the appliance is being installed into must not have a back wall behind the appliance.

› Minimum height 85cm. A gap must be maintained between the wall and the base of the unit above. Specific gap size can be referenced by the diagrams.

› Do not cover any ventilation slots or air intake points.

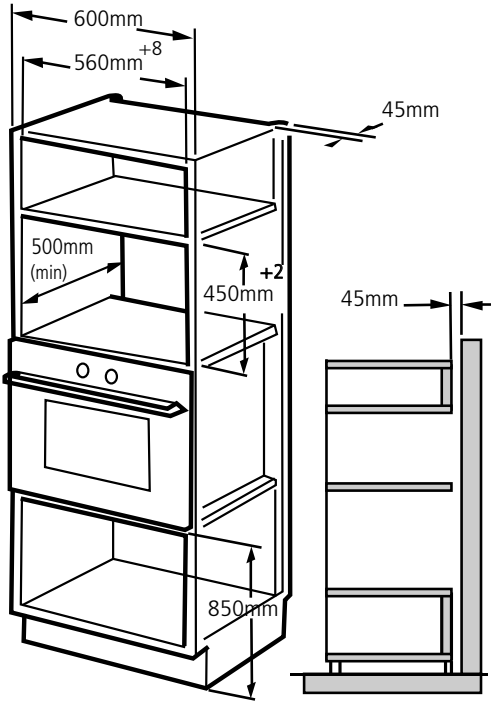

PREPARE THE CABINET

Read the instruction on the Bottom Cabinet Template:

Put the template on the bottom plane of cabinet.

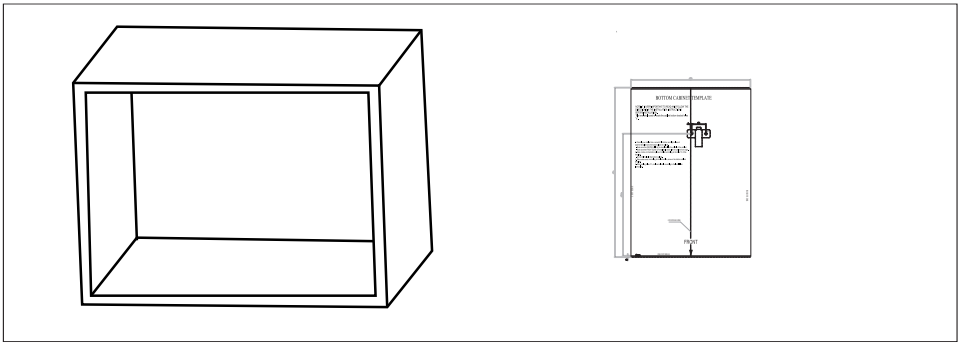

Make the marks on the bottom plane of cabinet according to marks ‘a’ of the template

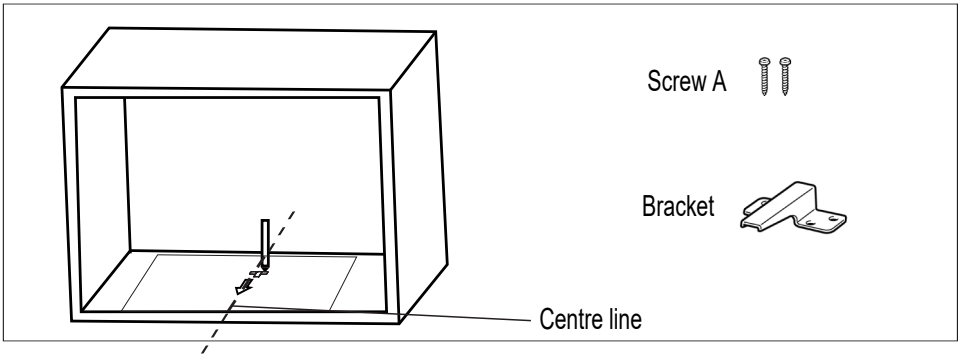

Remove the bottom cabinet template and fix the bracket with screw A.

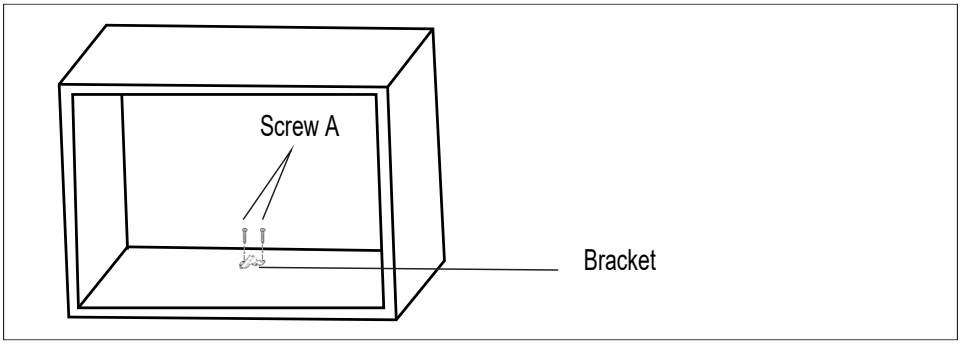

INSTALL THE MICROWAVE

Install the microwave to the cabinet:

› Make sure the back of the microwave is locked by bracket.

› Do not trap or kink the power cord.

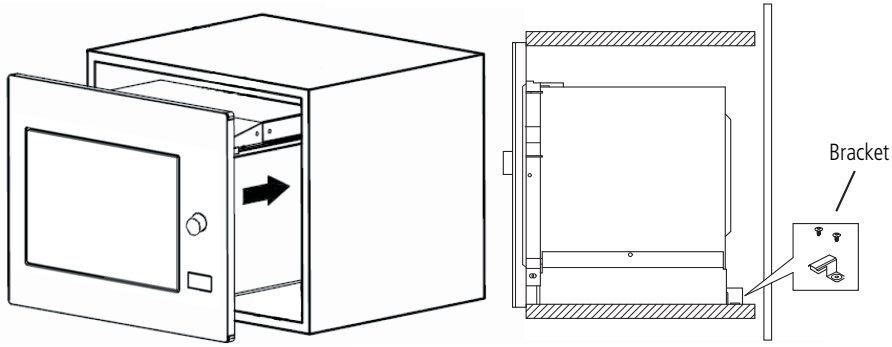

Open the door, fix the oven to the cabinet with Screw B, at the installation hole.

Then fix the Trim-kit plastic cover to the installation hole.

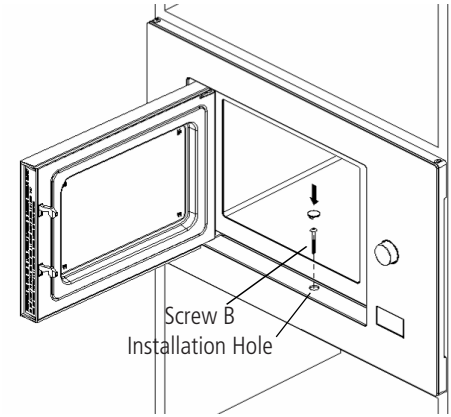

OPERATION INSTRUCTIONS

SETTING THE CLOCK:

When the microwave oven is switched on, the oven will display "0:00", a buzzer will ring once.

- Press "CLOCK/PRE-SET" to choose 12-hour or 24-hour.
- Turn " " to adjust the hour figures, the input time should be within 0-23 [24-hour] or 1-12 [12-hour].
- Press "CLOCK/PRE-SET", the minute figures will flash.
- Turn " " to adjust the minute figures, the input time should be within 0-59.
- Press "CLOCK/PRE-SET" to finish setting the clock. ":" will flash.

NOTE:

If the clock is not set, it will not function when powered.
During the process of clock setting, if you press "STOP/CLEAR", the oven will go back to the previous status automatically.

MICROWAVE COOKING:

- Press the "MICROWAVE " key once, and "P100" display.
- Press MICROWAVE" a few times or turn " " to select the microwave power from 100% to 10%. "P100", "P80", "P50", "P30", "P10" will display in order.
- Press "START/+30SEC./CONFIRM" to confirm.
- Turn " " to adjust the cooking time. [The time setting should be 0:05- 95:00]
- Press "START/+30SEC./CONFIRM" to start cooking.

NOTE:

When selecting a cooking duration, the timer will increase in the following quantities:

0 - 1 min	5 seconds
1 - 5 min	10 seconds
5 - 10 min	30 seconds
10 - 30 min	1 minute
30 - 95 min	5 minutes

For example when selecting a cooking duration between 1 - 5 minuets, the timer will go up in 10 second increments.

MICROWAVE POWER CHART:

PRESS	ONCE	TWICE	THRICE	4 TIMES	5 TIMES
Microwave Power	100%	80%	50%	30%	10%

GRILL COOKING:

› Press the GRILL/COMBI" key once, and "G-1" display.

› Press "GRILL/COMBI" for times or turn " " to select the grill power. Stop turning when "G-1" displays.

› Press "START/+30SEC./CONFIRM" to confirm.

› Turn " " to adjust the cooking time. [The time setting should be 0:05- 95:00]

› Press "START/+30SEC./CONFIRM " to start cooking.

NOTE:

If half the grill time passes, the oven will sound twice to tell you to turn the food over.
You can just leave it to continue cooking. In order to have a better effect of grilling food, you should turn the food over, close the door, and then press"START/+30SEC./CONFIRM" to continue cooking.

COMBINATION COOKING:

› Press the "GRILL/COMBI" key once, and "G-1" display.

› Press "GRILL/COMBI" a few times or turn " " to select the grill power. Stop turning when "C-1","C-2","C-3" or "C-4" displays.

› Press "START/+30SEC./CONFIRM" to confirm.

› Turn " " to adjust the cooking time. [The time setting should be 0:05- 95:00]

› Press "START/+30SEC./CONFIRM" to start cooking.

Combination Instructions:

INSTRUCTIONS	DISPLAY	MICROWAVE	GRILL	CONVECTION
1	C - 1	•		•
2	C - 2	•	•	
3	C - 3		•	•
4	C - 4	•	•	•

C-1 & C-2 maintains a 160-165 internal temperature
C-3 & C-4 maintains a 195-200 internal temperature

CONVECTION COOKING [WITH PREHEATING FUNCTION]:

Convection cooking can let you to cook the food as a traditional oven, and therefore the microwave function is not used. It is recommended that you should preheat the oven to the appropriate temperature before placing the food in the oven.

› Press the "CONVECTION" key once, "130" flash.

› Keep pressing CONVECTION" or turn " " to select the convection function.

NOTE:

The temperature can be selected from 130 degrees to 220 degrees.

› Press the "START/+30SEC./CONFIRM" to confirm the temperature.

› Press the "START/+30SEC./CONFIRM" to start preheating. When the required preheating temperature is reached, the buzzer will sound twice to remind you to put the food into the oven. The preheated temperature is displayed and flashes.

› Put the food into the oven and close the door. Turn " " to adjust the cooking time. [The maximum setting time is 95 minutes.]

› Press the "START/+30SEC./CONFIRM" key to start cooking.

NOTE:

Cooking time cannot be input until the preheating temperature is reached. If the temperature arrives, door must be opened to input the cooking time.

If the time not input in 5 minutes, the oven will stop preheating. The buzzer will sound five times and turn back to the standby state.

CONVECTION COOKING [WITHOUT PRE-HEATING FUNCTION]:

› Press the "CONVECTION" key once, "130" flash.

› Keep pressing "CONVECTION" or turn " " to select the convection function

NOTE:

The temperature can be selected from 130 degrees to 220 degrees.

› Press the "START/+30SEC./CONFIRM" to confirm the temperature.

› Turn " " to adjust the cooking time. [The maximum setting time is 95 minutes.]

› Press the "START/+30SEC./CONFIRM" key to start cooking.

MULTI-STAGE COOKING:

Two cooking stages can be set. If one stage is defrosting, it should be put in the first stage. The buzzer will ring once after each stage and the next stage will begin.

NOTE:

Auto menu and preheating cannot be set as one of the multi-stage options.

EXAMPLE:

If you want to defrost the food for 5 minutes, then to cook with 80%microwave power for 7 minutes. The steps are as following:

› Press "W.T./TIME DEFROST" twice, the screen will display "dEF2".

› Turn " " to adjust the defrost time of 5 minutes.

› Press"MICROWAVE" once.

› Press "MICROWAVE" four times or turn " " till "P80" display.

› Press "START/+30SEC./CONFIRM" to confirm.

› Turn " " to adjust the cooking time of 7 minutes.

› Press "START/+30SEC./CONFIRM" to start cooking.

TIMED AUTO COOKING:

› Set the clock first. [Consult the instructions for setting the clock.]

› Input the cooking program. Two stages can be set at most. Defrosting should not be set in pre-set function. The auto menu can be set for single stage cooking only.

EXAMPLE:

If you want to cook with 80% microwave power for 7 minutes.

› Press "MICROWAVE" once.

› Press "MICROWAVE" four times or turn " " to choose 80% microwave power till "P80" display.

› Press "START/+30SEC./CONFIRM" to confirm.

› Turn " " to adjust the cooking time of 7 minutes. After the above steps, please do not press"START/+30SEC./CONFIRM". Then do as following:

› Press "CLOCK/PRE-SET", current time displays and the hour figures flash.

› Turn " " to adjust the hour figures, the input time should be within 0-23 [24-hour] or 1-12 [12-hour].

› Press " CLOCK/PRE-SET ", the minute figures will flash.

› Turn " " to adjust the minute figures, the input time should be within 0-59.

› Press "START/+30SEC./CONFIRM" to finish setting. ":" will illuminate, the buzzer will ring twice when the time arrives, then cooking will start automatically.

NOTE:

The clock must be set first. Otherwise the pre-set function will not work.

AUTO MENU:

› In the standby state, turn " " right to select the required function, and "A1", "A2", "A3" ...."A10" will be displayed.

› Press "START/ +30 SEC./CONFIRM" to confirm the menu you need.

› Turn " " to choose the weight of menu, and "g" indicator will light.

› Press "START/ +30 SEC./CONFIRM" to start cooking.

NOTE:

When you choose A8 cake, please do not put the cake into the oven at the beginning. The oven needs to be preheated to 180 degrees first. After several minutes, the buzzer sounds twice to remind you to put the cake into the oven. After putting the cake in the oven, please press "Start/+30Sec./Confirm" again. The timer will count down, and the cake will be cooked perfectly.

AUTOMATIC MENU CHART:

MENU	WEIGHT [G]	DISPLAY	POWER
A1 PREHEAT	150	150	100%
	250	250	
	350	350	
	450	450	
	600	600	
A2 POTATO	1 [about 230g]	1	100%
	2 [about 460g]	2	
	3 [about 690g]	3	
A3 MEAT	150	150	100%
	300	300	
	450	450	
	600	600	
A4 VEGETABLE	150	150	100%
	350	350	
	500	500	
A5 FISH	150	150	80%
	250	250	
	350	350	
	450	450	
	650	650	
A6 PASTA	50 [With water 450g]	50	80%
	100 [with water 800g]	100	
	150 [with water 1200g]	150	
A7 SOUP	200	200	100%
	400	400	
	600	600	
A8 CAKE	475	475	Preheat at 180 degrees
A9 PIZZA	200	200	C - 4
	300	300	
	400	400	
A10 CHICKEN	500	500	C - 4
	750	750	
	1000	1000	
	1200	1200	

DEFROST BY WEIGHT:

- Press "W.T./TIME DEFROST" pad once, the oven will display "dEF1".
- Turn " " to select the weight of food. At the same time, "g" will illuminate. The weight should be 100-2000g.
- Press "START/+30SEC./CONFIRM" key to start defrosting " " and " " indicators will flash and "g" indicator will go out.

DEFROST BY TIME:

- Press "W.T./TIME DEFROST" key twice, the oven will display "dEF2".
- Turn " " to select the cooking time. The maximum allowed set time is 95 minutes.
- Press "START/+30SEC./CONFIRM" key to start defrosting. " " and " " indicators will flash.

NOTE:

If the food weight is no more than 200 grams, please place the food to be defrosted at the edge of the glass turntable and not the centre.

SPEED COOKING:

In standby mode, press "START/+30SEC./CONFIRM" key to start microwave cooking with 100% power for 30 seconds. Each press of the button will increase the timer by 30 seconds. The maximum cooking time is 95 minutes.

INQUIRING FUNCTION:

- In a cooking mode, press"MICROWAVE","GRILL/ COMBI" or "CONVECTION", and the current power will be displayed for 2-3 seconds.
- In pre-set state, press " CLOCK/PRE-SET " to inquire the time for delay start cooking. The pre-set time will flash for 2-3 seconds, the oven will then revert back to the clock display.
- During the cooking state, press "CLOCK/PRE-SET" to check the current time. It will be displayed for 2-3 seconds.

CHILD SAFETY LOCK:

Lock: In standby mode, press "STOP/CLEAR" for 3 seconds, there will be a long "beep" denoting entering into the lock state and " " indicator will illuminate. The LED will display the current time or 0:00.

Quitting Lock: In the locked state, press "STOP/CLEAR" for 3 seconds, there will be a long "beep" denoting that the lock is now released, and the " 🔒 " indicator will disappear.

OTHER INFORMATION:

- The buzzer will sound once when turning the knob at the beginning.
- "START/+30 SEC./CONFIRM" must be pressed to continue cooking if the door is opened during cooking.
- Once the cooking programme has been set , if the "START/+30 SEC./CONFIRM" is not pressed in 5 minutes. The current time will be displayed and the setting will be cancelled.
- The buzzer sounds once with every press, if a press is not recognised there will be no response.
- The buzzer will sound five times to tell you when cooking has finished.

TROUBLESHOOTING

NORMAL	
Microwave oven interring with TV reception.	Radio and TV reception may be interfered when microwave oven operating. It is similar to the interference of small electrical appliances like, mixer, vacuum, cleaner and electric fan. It is normal.
Dim oven light.	In low power microwave cooking, oven light may become dim. It is normal .
Steam accumulating on door, hot air out of vents.	In cooking, steam may come out of food, most will get out form vents but some may accumulate on a cool place such as the oven door. It is normal.
Oven started accidentally with no food in.	You must not run the unit without any food inside. It is very dangerous.

TROUBLE	POSSIBLE CAUSE	REMEDY
Oven can not be started.	Power cord not plugged in tightly.	Unplug. Then plug again after 1 0 seconds.
	Fuse blowing or circuit breaker works.	Replace fuse of reset circuit breaker [repaired by professional personnel of our company].
	Trouble with outlet.	Test outlet with other electrical appliances.
Oven does not heat.	Door not closed well.	Close door well.
Glass turntable makes a noise when microwave oven operates.	Dirty roller rest oven bottom.	Refer to "Maintenance of Microwave" to clean dirty parts.

TECHNICAL DATA

MODEL	CM126
Rated Voltage:	230V ~ 50Hz
Rated Input Power	1450W
Rated Output Power	900W
Rated Grill Input Power	1100W
Rated Input Power [Convection]	2500W
Oven Capacity	25L
Turntable Diameter	315mm
External Dimensions [L x W x H]	595 x 470 x 460mm
Net Weight	Approx. 21.5kg

ENERGY CONSUMPTION	
Product information for power consumption and maximum time to reach applicable low power mode.	
Standby mode	0.8W
The maximum time needed for the microwave oven to automatically reach the applicable low power mode or condition.	20 minutes

Caple Service
Fourth Way
Avonmouth
Bristol
BS11 8DW

T: 0117 938 1900
E: service@caple.co.uk
www.caple.co.uk