C3242

Caple Built-In Double Fan Oven

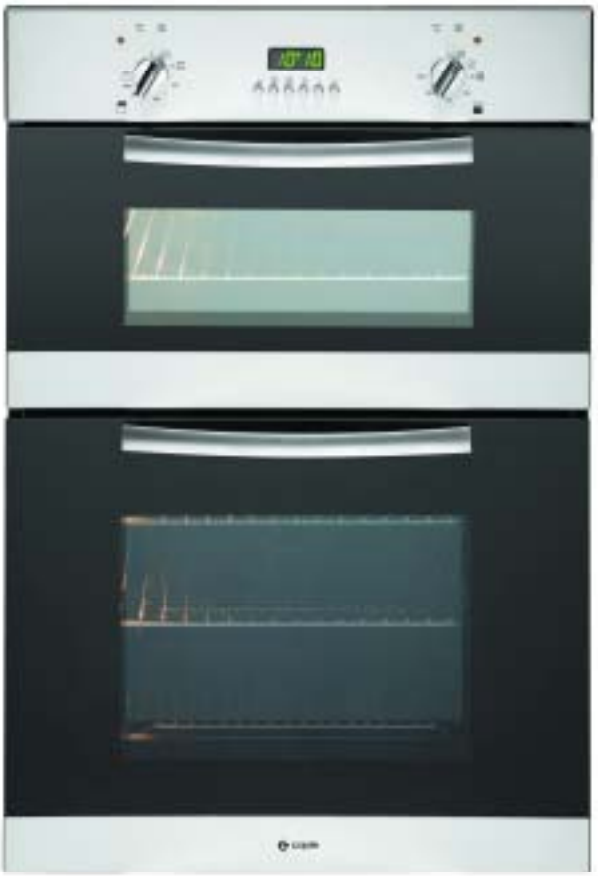

TECHNICAL INFORMATION

C3242 - Caple Built-In Double Fan Oven

New product information sheet

Product name: C3242
Description: Double built in oven
Product code: C3242

Top oven features
Energy B
3 Functions:
- *light*
- *conventional heat*
- *full grill*

33 Litre capacity

Bottom oven features
3 Functions:
Energy A
- *light*
- *fan heat*
- *turbo defrost*

58 Litre capacity
Programmable electronic timer
Self-cleaning catalytic liners available

General features
Stainless steel and glass
Closed door grilling
Tangential cooling fan
Smooth and flat oven sides with chrome shelf racks
Double glazed doors with heat reflective glass
Top interior lights

C3242 - Caple Built-In Double Fan Oven

New product information sheet

Product name: C3242
Description: Double built in oven
Product code: C3242

Accessories
2 Safety-stop shelves in bottom oven
1 Grill pan with handle in top oven
Multiple position telescopic shelving racks available for top and bottom ovens

Electrical connection
Rated load 4.25kW
Fuse rating 20A

Optional extras
Side and rear catalytic liners for bottom oven CAPCAT5
Multiple position telescopic shelving racks for top and bottom ovens CAPRACK2

caple

C3242

Caple Built-In Double Fan Oven

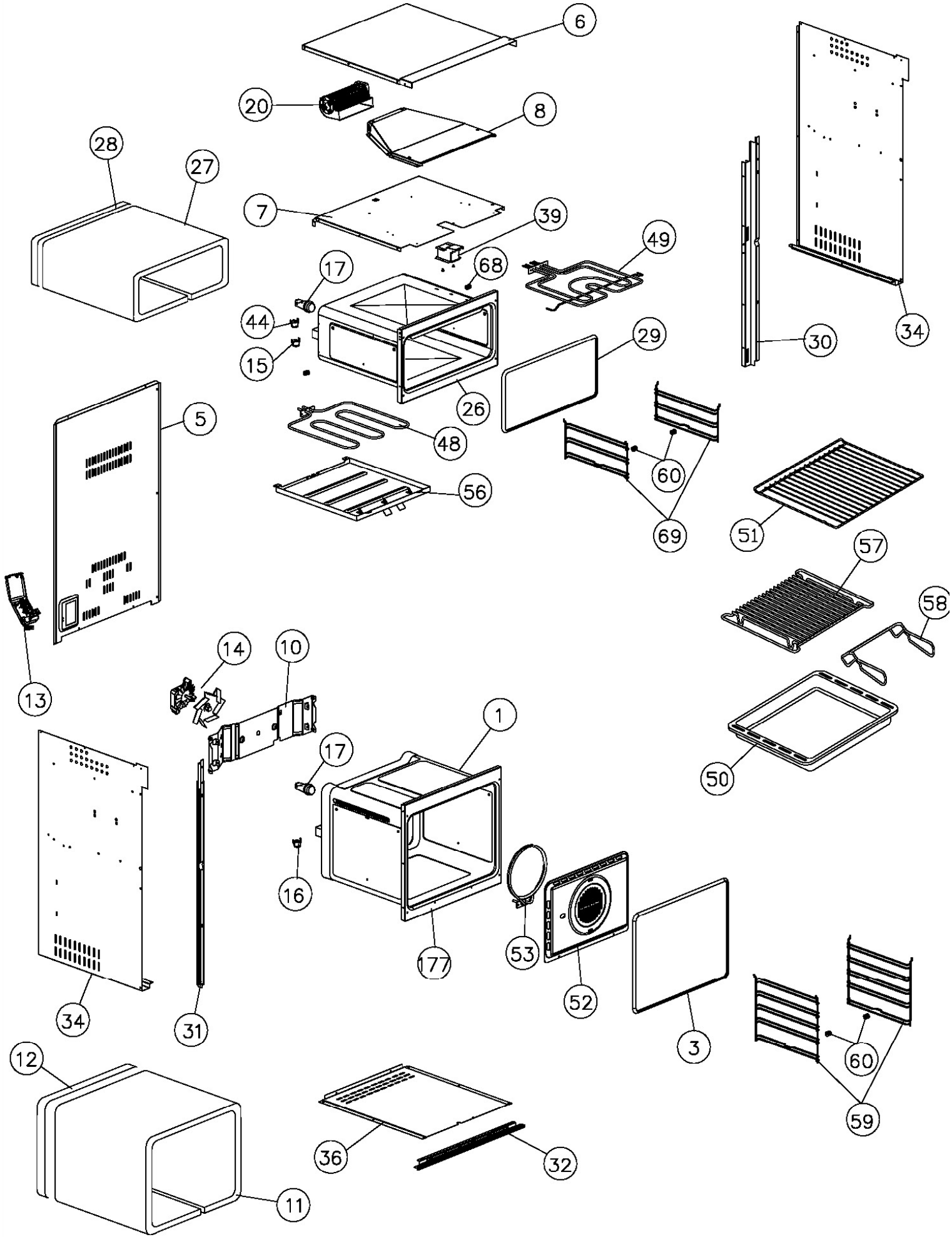

caple

C3242

Caple Built-In Double Fan Oven

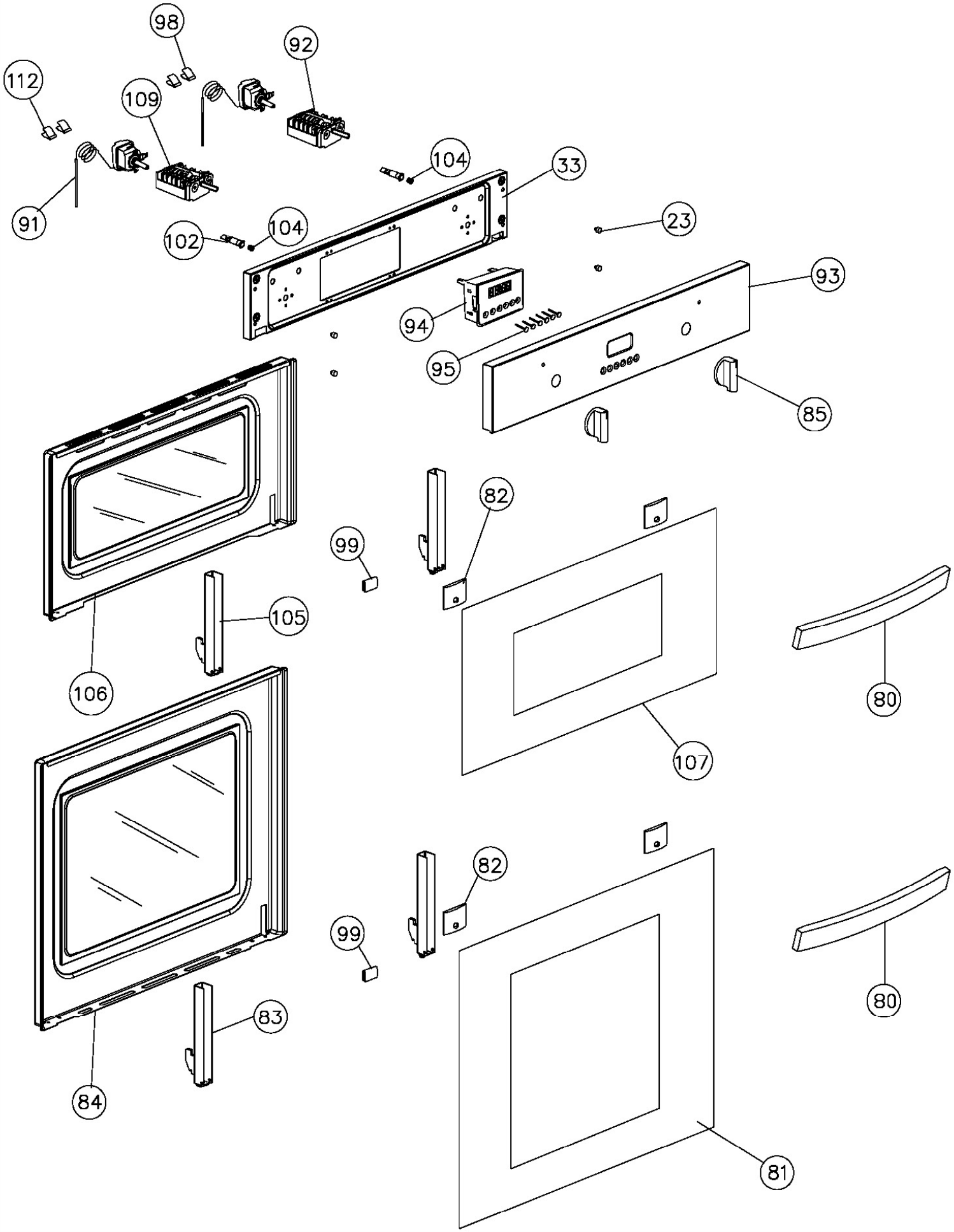

C3242 - Caple double oven

Item	Part Code	Description
1a	42700361	MUFFLE (until 23/03/14)
1b	42703471	MUFFLE (from 24/03/14)
3a	12380130	MUFFLE GASKET (until 26/12/10)
3b	12380200	MUFFLE GASKET (from 27/12/10 until 26/06/12)
3c	12381600	MUFFLE GASKET (from 27/06/12 until 23/03/14)
3d	12382140	MUFFLE GASKET (from 24/03/14 until 07/08/14)
3e	12382110	MUFFLE GASKET (from 08/08/14)
5	12111180	BACK SHIELD
6	12111170	TOP SHIELD
7a	12111220	LOWER AIR CONVEYOR (until 27/09/15)
7b	12113440	LOWER AIR CONVEYOR (from 28/09/15)
8	12111380	UPPER AIR CONVEYOR
10a	12190020	SUPPORT BAR (until 23/03/11)
10b	12192660	SUPPORT BAR (from 24/03/11)
11	12380470	FIBERGLASS SHELL
12	12380480	FIBERGLASS REAR
13a	12530010	TERMINAL BLOCK/FASTEN CABLE 40A (until 31/12/11)
13b	12750076	TERMINAL BLOCK/FASTEN CABLE 40A (from 01/01/12)
14a	12590030	RADIAL FAN (until 09/10/11)
14b	12590190	RADIAL FAN (from 10/10/11)
15	12540943	SAFETY THERMOSTAT PRESET T165¢C
16	12540930	SAFETY THERMOSTAT PRESET T65¢C
17a	12540002	LAMP SOCKET 25W T300 230/240V (until 26/07/15)
17b	12541980	HALOGEN LAMP SOCKET 25W 230V (from 27/07/15)
20	12590090	TANGENTIAL COOLING FAN
23	11380500	EPDM H.6 CRYSTAL SPACER
26	42700231	MUFFLE
27	12380180	FIBERGLASS SHELL
28	12380170	FIBERGLASS REAR
29	12380160	MUFFLE GASKET
30	12701461	BODY CENTER PILLAR
31	12701451	BODY CENTER PILLAR
32	12111231	LOWER DRIP PROFILE D72-88 BLACK
33a	12111461	COUNTER FRONTAL (until 08/09/13)
33b	12112681	COUNTER FRONTAL (from 09/09/13)
34	12111150	LEFT-RIGHT SIDE SHIELD
36	12111160	BOTTOM SHIELD
39	12701010	EXAUSTING GAS CHIMNEY
44	12540942	SAFETY THERMOSTAT PRESET T185¢C
48a	12570080	BOTTOM HEATING ELEMENT 850W (until 05/07/15)
48b	12570392	BOTTOM HEATING ELEMENT 850W (from 06/07/15)
49	12570050	UPPER HEATING ELEMENT 750/1000W
50a	42105121	*TRAY F60 H30 BLACK (until 03/02/11)
50b	42105291	TRAY F60 H30 BLACK (from 04/02/11)

C3242 - Caple double oven

Item	Part Code	Description
51	12200230	SHELF
52	42105081	FAN COVER BLACK
53	12570030	CIRCULAR HEATING ELEMENT 2300W
56a	12190030	FASTENER BOTTOM HEATING ELEMENT (until 23/06/15)
56b	12194240	FASTENER BOTTOM HEATING ELEMENT (from 24/06/15)
57	12200090	GRILL PAN SHELF
58a	12200100	DOUBLE HANDLE GRILL PAN (until 21/10/12)
58b	12200450	DOUBLE HANDLE GRILL PAN (from 22/10/12)
59	12200000	OVEN's SIDE RACK
60	12280020	PAWL FOR SIDE RACK
68	12280090	GRILL HEATING ELEMENT FASTENER
69	12200080	OVEN's SIDE RACK
80	12740111	HANDLE MOD109
81	42712760	GLASS DOOR
82	12190140	PLAQUE FIX.HANDLE BLACK
83	12600030	OVEN HINGE
84	42710440	INNER DOOR
85	11741801	KNOB
91	12540870	THERMOSTAT
92	12540860	COMMUTATOR
93	12168190	CONTROL PANEL
94a	12540425	ELECTRONIC TIMER GREEN (until 31/05/12)
94b	12541535	ELECTRONIC TIMER GREEN (from 01/06/12)
95a	12300003	BUTTON ELECTRONIC TIMER (until 31/05/12)
95b	12300843	BUTTON ELECTRONIC TIMER (from 01/06/12)
98	12280000	SPRING FOR THERMOSTAT BULB
99	12380650	RUBBER FOOT FOR HINGE
102	12540130	INDICATOR LAMP
104	12540142	ORANGE LIGHT CAP
105	12600050	D.2,5 EST.D.14 OVEN HINGE
106	42710480	INNER DOOR
107	42712758	GLASS DOOR
109	12540850	COMMUTATOR
112	12280221	SPRING FOR THERMOSTAT BULB
177	42100871	FRONT WALL MUFFLE (from 24/03/14)

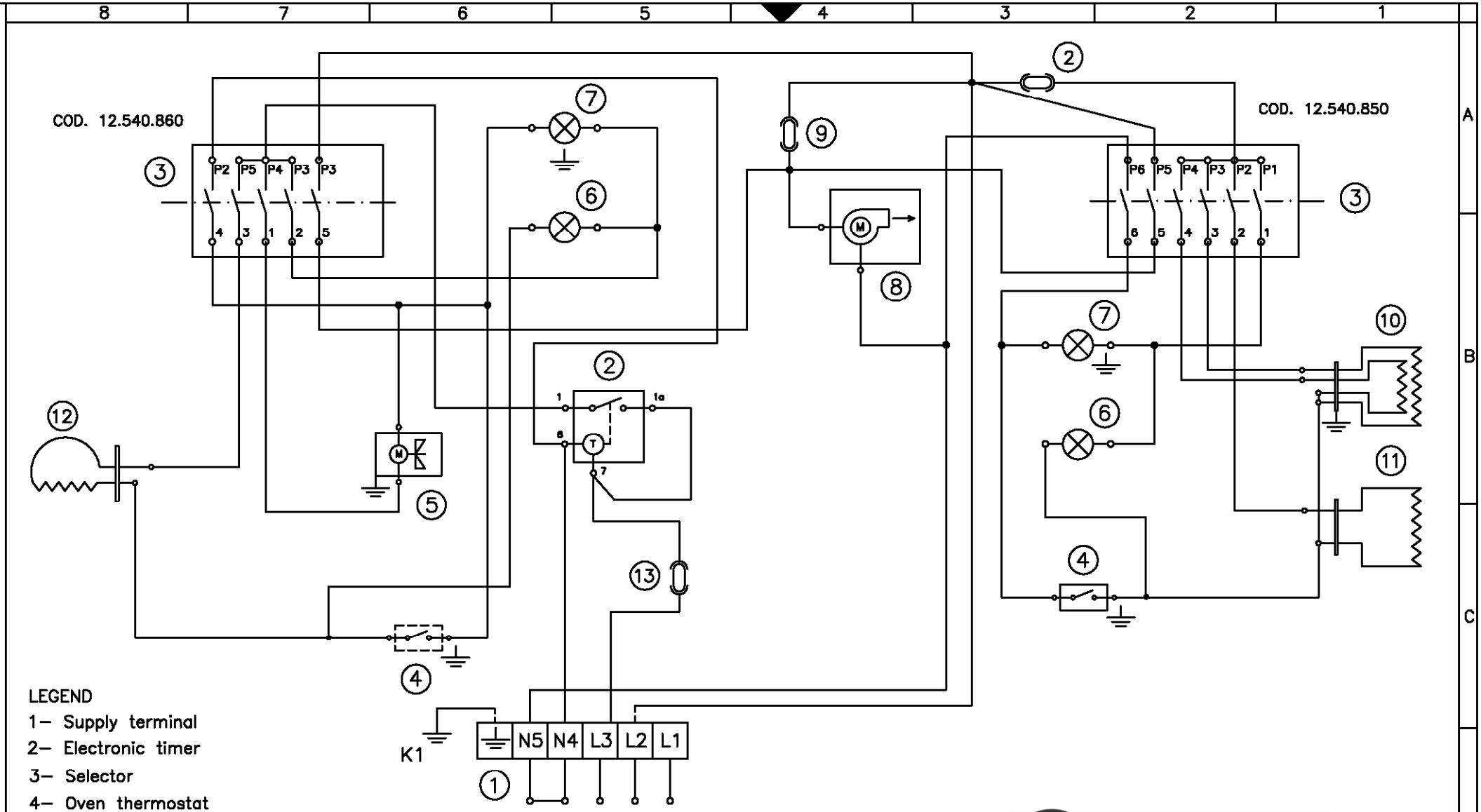

LEGEND

1– Supply terminal
2– Electronic timer
3– Selector
4– Oven thermostat
5– Fan motor
6– Pilot lamp thermostat
7– Oven light
8– Cooling fan motor
9– Thermostat start cooling fan
10– Upper+grill heating element
11– Botton heating element
12– Circular heating element
13– Thermal cut–out

K1– Earth appliance
K2– Earth fan motor

K4– Earth upper heating element
K5– Earth lamp holder
K6– Earth thermostat

caple

C3242

Caple Built in Double fan Oven

FORMATO
A3H