Telescopic hood instruction manual

TSCH600

Contact Caple on 0117 938 7420 or for spare parts www.caple.co.uk

CONTENTS

Introduction	3
Safety instructions	4
Environmental protection	9
Installation	10
Installing the charcoal filter	12
Operation	13
Care and maintenance	14
Troubleshooting	15
Guarantee	17

Please keep this instruction manual for future reference

TSCH600.indd 2 13/03/2017 16:08

INTRODUCTION

Thank you for choosing this Caple extractor hood.

To ensure that you get the best results from your new extractor, we strongly suggest that you read this instruction manual thoroughly before use. If treated with care, your Caple extractor should give you years of trouble-free use.

To register ownership, please ensure you complete and return the guarantee card supplied with the appliance or visit www.caple.co.uk and register here.

This instruction manual is designed to provide you with all the required information related to the installation, use and maintenance of the appliance.

This hood is designed to extract unpleasant odours from the kitchen; it is not intended to extract steam. In order to operate the unit correctly and safely, please read this instruction manual carefully before installation and use.

The cooker hood uses high quality materials and is made with a streamlined design. Equipped with an electric motor and centrifugal fan, it provides strong extraction with low noise. It also features non-stick grease filters and an easy installation.

Please keep this instruction manual for future reference

TSCH600.indd 3 13/03/2017 16:08

IMPORTANT

This appliance must only be used for the purpose it is intended. Other types of use are not permitted and may prove dangerous. Caple will not be held liable for any damage caused by the incorrect use of the appliance.

Do not use any accessories or attachments not recommended by Caple as this may result in fire, electric shock or injury.

To protect against fire, electrical shock and injury to persons, do not immerse cords or plugs in water or any other liquid.

Never touch the appliance with wet or damp hands.

Never pull the power cable as you could damage it. If the appliance is faulty, do not attempt to repair it. Isolate it from the mains electric supply and contact Caple Service either by phone 0117 938 7420 or email service@caple.co.uk

Keep all packaging (including plastic bags, polystyrene foam etc) out of the reach and away from children.

Do not rest large or unstable objects on any part of the appliance.

Please keep this instruction manual for future reference

TSCH600.indd 4 13/03/2017 16:08

IMPORTANT

Caple cannot be held responsible for injuries or losses caused by incorrect use or installation of this product. Please note that Caple reserve the right to invalidate the guarantee supplied with this product following incorrect installation or misuse of the appliance. Under no circumstances should any external covers be removed for servicing or maintenance except by suitably qualified personnel.

SAFETY INSTRUCTIONS

- Never let children operate the machine.
- The cooker hood is for home use only, not suitable for barbecuing, restaurants or other commercial purposes.
- The cooker hood and its filter should be cleaned regularly in order to keep in good working condition.
- Clean the cooker hood according to the instruction manual to reduce the risk of fire.
- When using a gas hob, do not leave naked flames under the extractor.
- Before connecting this appliance check that the power supply cord is not damaged.

Please keep this instruction manual for future reference

TSCH600.indd 5 13/03/2017 16:08

- If the room where the hood is to be used contains a fuel burning appliance such as a central heating boiler then its flue must be of the sealed or balanced flue type. If other types of flue or appliances are fitted ensure that there is an adequate supply of air to the room.
- The air must not be discharged into a flue that is used for exhausting fumes from appliances burning gas or other fuels.
- Regulations concerning the discharge of air have to be conformed to.
- Do not flambé under the cooker hood.
- Never leave frying pans unattended during use as over-heated fats and oils may catch fire.
- To ensure the best performance, we recommend switching on the extractor 15 minutes before cooking and leave it running 15 minutes after. This will ensure that the air in the kitchen is being circulated before cooking commences and the air is being cleaned after cooking has finished.
- The performance of your extractor will vary depending on a number of factors. These include type of extraction, room volume, length of ducting, ventilation available and the cleanliness of the filters.

Please keep this instruction manual for future reference

TSCH600.indd 6 13/03/2017 16:08

- This appliance is not intended for use by persons (including children) with reduced physical, sensory or mental capabilities, or lack of experience and knowledge, unless they have been given supervision or instruction concerning use of the appliance by a person responsible for their safety.
- Children should be supervised to ensure that they do not play with the appliance.
- Cleaning and user maintenance must not be made by children without supervision.
- Never immerse the appliance in water.
- This product is not designed for commercial use, it is a household appliance only. It is not intended to be used in:
  - Staff kitchen areas in shops, offices and other working environments.
  - Bed and breakfast type environments.
  - By clients in hotels, motels and other residential type environments.
- To avoid all risk, if the power cable is damaged, it must only be replaced by a Caple appointed engineer.

Please keep this instruction manual for future reference

TSCH600.indd 7 13/03/2017 16:08

- Appliances can be used by persons with reduced physical, sensory or mental capabilities or lack of experience and knowledge if they have been given supervision or instruction concerning use of the appliance in a safe way and understand the hazards involved.
- Children must not play with this appliance.
- When not in use and before cleaning, always isolate the appliance from the electrical supply.

ELECTRICAL SHOCK HAZARD

- Only plug this unit into a properly earthed outlet. If in doubt seek advice from a suitably qualified engineer.
- Failure to follow these instructions can result in death, fire, or electrical shock.
- This appliance must be connected to the mains by a competent person. We recommend that the appliance is connected by a qualified electrician who is a member of the N.I.C.E.I.C who will comply with the I.E.E and local regulations. Electrical information can be found on the rating plate.

Please keep this instruction manual for future reference

TSCH600.indd 8 13/03/2017 16:08

ENVIRONMENTAL PROTECTION

Waste electrical products should not be disposed of with household waste. Please recycle where facilities exist. Check with your Local Authority or retailer for recycling advice. This appliance is marked according to the European directive 2002/96/EC on Waste Electrical and Electronic Equipment (WEEE).

By ensuring this product is disposed of correctly, you will help prevent potential negative consequences for the environment and human health, which could otherwise be caused by inappropriate waste handling of this product. The symbol on the product indicates that this product may not be treated as household waste. Instead it shall be handed over to the applicable collection point for the recycling of electrical and electronic equipment. Disposal must be carried out in accordance with local environmental regulations for waste disposal.

For more detailed information about treatment, recovery and recycling of this product, please contact your local council, your household waste disposal service or the retailer where you purchased the product

CE DECLARATIONS OF CONFORMITY

This appliance has been manufactured to the strictest standards and complies with all applicable legislation, Low Voltage Directive (LVD) and Electromagnetic Compatibility (EMC).

Please keep this instruction manual for future reference

TSCH600.indd 9 13/03/2017 16:08

INSTALLATION

Prepare for the installation:

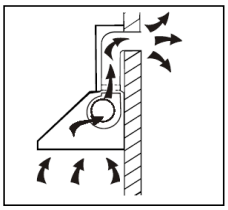

If you have an outlet to the outside, your cooker hood can be connected as per the below picture by means of an extraction duct with an interior diameter of 150mm.

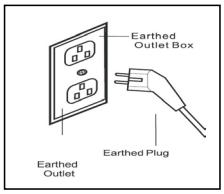

Before installation, turn the unit off and unplug it from the outlet.

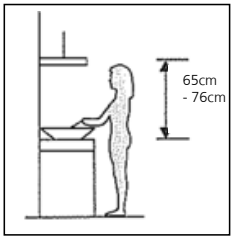

The cooker hood should be placed at a minimum distance of 65~76cm above the hob. It is the manufacturer of the hob who determines the clearance required and the clearance quoted by the hob manufacturer must be followed. In the absence of any instructions supplied with a gas hob the minimum distance between the hob and the hood must be at least 760mm.

Please keep this instruction manual for future reference

TSCH600.indd 10 13/03/2017 16:08

INSTALLATION TYPE ONE

To install onto the wall drill two Ø8mm holes in a suitable place according with the centre distance of the holes in the back of the cooker hood.

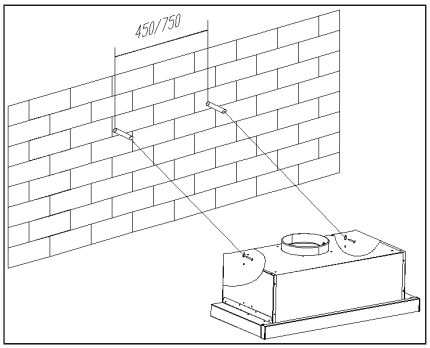

Insert the nut into the holes.

Insert the screws into the nuts and tighten. Place the cooker hood onto the tightened screws.

Fix the cooker hood with safety screw. The two safety vents are positioned on the back casing, with diameter of 6mm.

Put the one way valve onto the cooker hood.

INSTALLATION TYPE TWO

Drill 4 holes of 6mm diameter at the bottom of the hanging cupboard

Fix the one way valve to the cooker hood, then install the cooker hood on the bottom of the hanging cupboard, tighten the hood with the enclosed 4 screws.

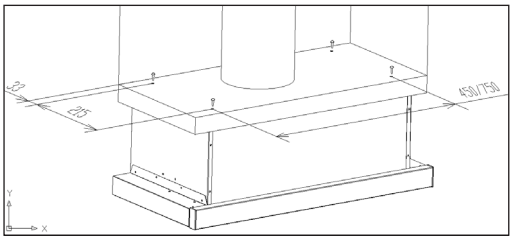

NOTE:

The ducting is an optional accessory, it is not supplied.
Remove the protection film before installation.

Please keep this instruction manual for future reference

TSCH600.indd 11 13/03/2017 16:08

Installing the charcoal filter (CAP60CF)

If you are not externally venting this extractor, you will require the CAP60CF recirculating filters to use this extractor in recirculation mode (not included). To install these, firstly pull the retractable front panel out to expose both aluminum grease filters. Remove these grease filters by pressing the release button and pulling downwards as shown below.

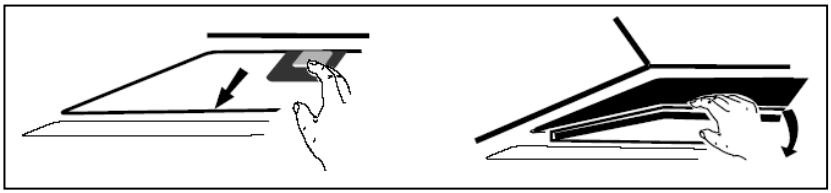

Fit the charcoal filter onto the side of the motor and turn it in a clockwise direction to lock into place. Repeat the same on the other side.

NOTE:

Make sure the filter is securely locked. Otherwise, it may loosen and be dangerous.

When using a charcoal filter, the extraction power may be slightly reduced.

We recommend replacing these filters every 6 months. Replacement filters (CAP60CF) can be purchased directly from www.caple.co.uk

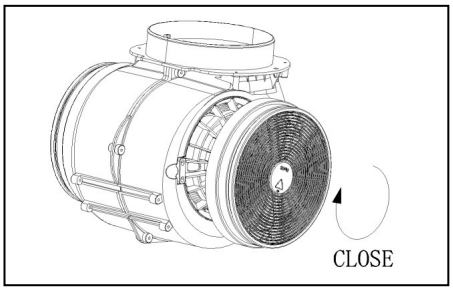

Please keep this instruction manual for future reference

TSCH600.indd 12 13/03/2017 16:08

OPERATION

Light button: located on the left side of the hood, switches the light on and off

Speed button: located on the right side of the hood.
“=”: high speed level.
“-”: Low speed level.
“o”: Off

Please keep this instruction manual for future reference

TSCH600.indd 13 13/03/2017 16:08

CARE AND MAINTENANCE

IMPORTANT:
Before cleaning or maintenance please switch off the electricity supply and remove the plug from the wall.

Regular cleaning
Use a soft damp cloth with lukewarm mildly soapy water or household cleaning detergent. Never use metal pads, chemicals, abrasive material, abrasive cleaning creams or stiff brushes to clean the appliance.

Cleaning the grease filter
Clean the filter every month to help minimise the risk of fire. The filter collects grease, smoke and dust, therefore the filter is directly affecting the efficiency of the cooker hood. If not cleaned, the grease residue (which is potentially flammable) will saturate the filter. It can be easily cleaned with warm water and washing up liquid, alternatively the filters can be cleaned in your dishwasher. Please ensure no other items are washed with the filters, they must be washed separately to prevent food becoming trapped in the gauze. Cleaning the grease filters in the dishwasher may lead to discolouration, this is normal and is a not a fault with the product.

Replacing your charcoal filter
This only applies if you are using the hood in recirculation mode (not vented to the outside). The charcoal filter traps your cooking odours and they need to be replaced, this can vary depending on how frequently the cooker hood is used. We recommend replacing them at least every 6 months.

This extractor uses CAP60CF charcoal filters. Filters can be purchased directly from **www.caple.co.uk.**

Please keep this instruction manual for future reference

TSCH600.indd 14 13/03/2017 16:08

REPLACING THE BULB

1. Switch the unit off and unplug the appliance.
2. Remove the aluminium filter
3. Unscrew the blown bulb
4. Replace the E14 Incandescent Bulb:
   (220V E14 Max 28W).

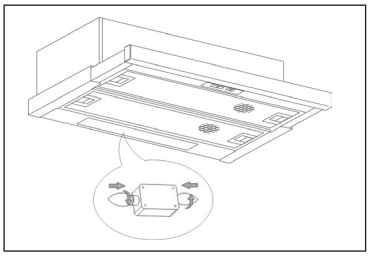

TROUBLESHOOTING

Fault	Cause	Solution
The lights on, but the fan does not work	The fan blade is jammed	Switch off the unit and contact Caple Service. To be repaired by qualified service personnel only.
	The motor is damaged	
The lights and fan do not work	A blown fuse	Replace the fuse
	The power cord is loose	Plug in to the power supply again
Serious vibration of the unit	The fan blade is damaged	Switch off the unit and contact Caple Service. To be repaired by qualified service personnel only
	The fan motor is not fixed tightly.	Switch off the unit and contact Caple Service. To be repaired by qualified service personnel only
	The unit is not hung correctly on the bracket	Take down the unit and check whether the bracket is in the correct location.
The extraction performance is not good	The filter requires cleaning	Clean the grease filter as directed in the 'Care and maintenance' section. Replace the charcoal filter (if in recirculation mode)

If the above table has not solved the problem please contact Caple Service by phone on **0119 938 7420** or by email **service@caple.co.uk**

Please keep this instruction manual for future reference

TSCH600.indd 15 13/03/2017 16:08

PRODUCT DIMENSIONS

TSCH600

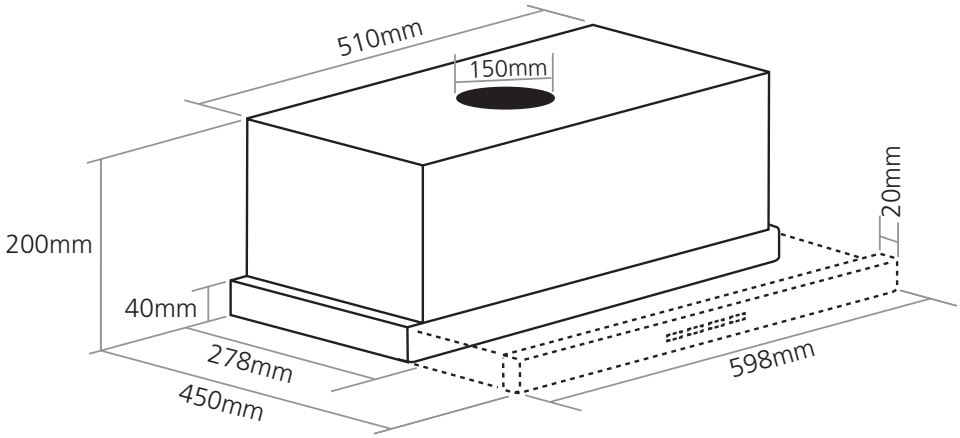

Please keep this instruction manual for future reference

TSCH600.indd 16 13/03/2017 16:08

GUARANTEE

Caple undertake that if within 2 years from the date of the purchase, this appliance or any part thereof that is proved to be defective by reason only of faulty workmanship or materials, we will at our option repair or replace the same free of any charge for labour or materials on condition that:

- Documentation must be provided before a guarantee repair commences to confirm that the extractor is within the guarantee period.
- The appliance has been correctly installed and used only on the electrical supply stated on the rating plate.
- The appliance has been used for normal domestic purposes only, and in accordance with the operating and maintenance instructions.
- The appliance has not been serviced, maintained, repaired, taken apart or tampered with by any person not authorised by us.
- All service work under this guarantee must be undertaken by Caple Service Centre.
- Any appliance or defective part replaced shall become the property of this company.
- If a service call is made and it is found that the installation has not been carried out correctly or customer misuse/abuse is involved the cost of the service call has to be paid for by the user before any service work is carried out.

EXCLUSIONS

THIS GUARANTEE DOES NOT COVER:

- Damage or calls resulting from transportation, improper use or neglect, the replacement of any light bulbs or removable parts of glass or plastic.
- Costs incurred for calls to put right appliances improperly installed or calls to appliances outside the United Kingdom.
- Appliances found to be in use within a commercial environment, plus those which are the subject of rental agreements.
- This guarantee is in addition to and does not affect your statutory and legal rights.

Please keep this instruction manual for future reference

TSCH600.indd 17 13/03/2017 16:08

NOTES

Please keep this instruction manual for future reference

TSCH600.indd 18 13/03/2017 16:08

NOTES

Please keep this instruction manual for future reference

TSCH600.indd 19 13/03/2017 16:08

Caple Service
Fourth Way
Avonmouth
Bristol
BS11 8DW

t: 0117 938 7420
e: service@caple.co.uk
www.caple.co.uk

Please keep this instruction manual for future reference

TSCH600.indd 20 13/03/2017 16:08